VERTICAL EXTRUDER
RAISE/LOWER OCS

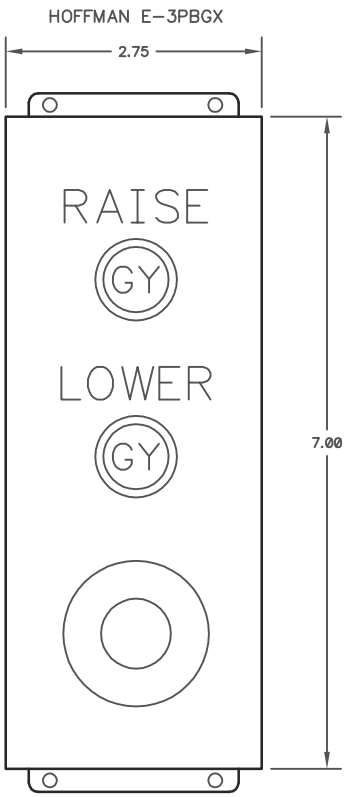

NOTE: ALL TAGS TO BE
IN SPANISH.

TRANSLATIONS
RAISE = SUBIR
LOWER = BAJAR

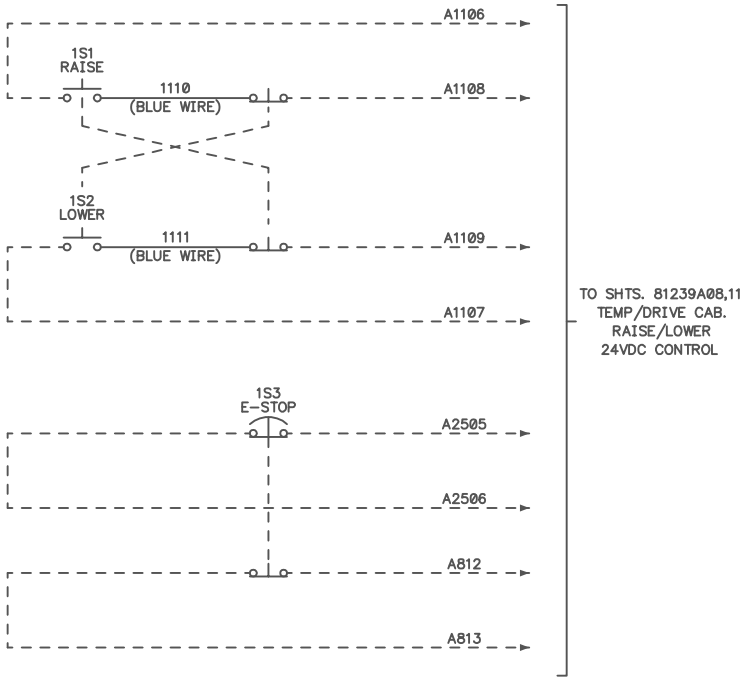

Davis-Standard® CONTROLS	1 Extrusion Drive Pawcatuck, CT 06379 Tel : (860) 599-1010 Fax : (860) 599-2952 www.Davis-Standard.com	DATE 10/07/05 ENG DAG CAD 81239E01 MSTR	HONEYWELL GENESIS CABLE	WIRING DIAGRAM DSA125 VERTICAL EXTRUDER RAISE/LOWER OCS	D C B A	SHT 1 OF 1 BOM BE959 DWG 81239E

WIRING PRACTICES

FUNCTION	CE STANDARD
EQUIPMENT GROUNDING CONDUCTORS	GREEN WITH YELLOW STRIPE 30% MINIMUM EACH COLOR
NEUTRAL CONDUCTORS (4-WIRE POWER SUPPLIES)	LIGHT BLUE
GROUNDED AC CONDUCTORS	WHITE
AC OR DC POWER CIRCUITS	BLACK
AC CONTROL CIRCUITS	RED
DC CONTROL CIRCUITS	BLUE
GROUNDED DC COMMON	WHITE WITH BLUE STRIPE
INTERLOCK CONTROL CIRCUITS SUPPLIED FROM AN EXTERNAL POWER SOURCE	ORANGE

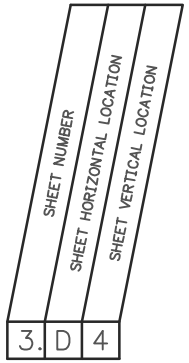

SHEET CROSS REFERENCE

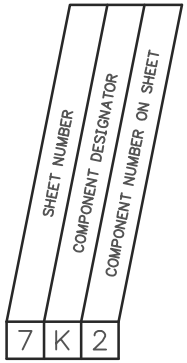

COMPONENT LABEL

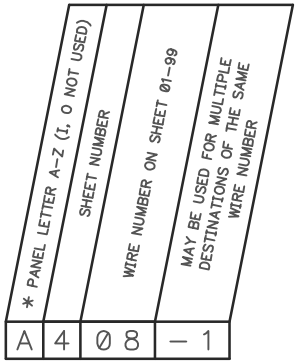

WIRE NUMBER

* PANEL LETTER IS OPTIONAL. ONLY REQUIRED FOR OUTGOING WIRES IN MULTIPLE SYSTEMS.

COMPONENT DESIGNATIONS

DESIGNATOR	DESCRIPTION
A	ASSEMBLIES, SUBASSEMBLIES DRIVES, MACO MODULES
B	NON-ELECTRICAL TO ELECTRICAL: THERMOCOUPLES, TRANSDUCERS, ENCODERS
C	CAPACITORS
D	BINARY ELEMENTS, DIGITAL IC's AND DEVICES
E	MISCELLANEOUS, HEATING DEVICES FLUORESCENT LIGHTS
F	FUSES
G	POWER SUPPLIES, TACH GENERATORS
H	INDICATORS, HORNS, PILOT LIGHTS STACK LIGHTS, ROTATING BEACONS
K	RELAYS, SSR's, CONTACTORS, STARTERS
L	INDUCTORS, REACTORS, LINE CHOKES
M	MOTORS, FANS
N	OP-AMPS
P	MEASURING EQUIPMENT: METERS, CHART RECORDERS, HOUR METERS, ETC.
Q	CIRCUIT BREAKERS, MANUAL MOTOR PROTECTORS
R	RESISTORS, DYNAMIC BRAKES POTENTIOMETERS, SHUNTS, RHEOSTATS
S	SELECTOR SWITCHES, PUSHBUTTONS
T	TRANSFORMERS, CURRENT TRANSFORMERS
U	CONVERTERS SIGNAL CONDITIONERS, F/V's, MODEMS
V	TUBE, SEMICONDUCTORS, DIODES, MOV's
W	CABLE ASSEMBLIES, BUSS WORK
X	CONNECTORS, PLUGS, RECEPTACLES DISTRIBUTION BLOCKS, TERMINAL STRIPS
Y	ELECTRICALLY OPERATED MECHANICAL DEVICES SOLENOIDS, BRAKES, CLUTCHES, ETC.
Z	FILTERS, ISLATROLS, RFI FILTERS, ETC.

Davis-Standard® CONTROLS
1 Extrusion Drive
Pawcatuck, CT 06379
Tel : (860) 599-1010
Fax : (860) 599-2952
www.Davis-Standard.com

DATE	10/05/05
ENG	DAG
CAD	81239-02
MSTR	PC32-

HONEYWELL GENESIS CABLE

WIRING PRACTICES & COMPONENT DESIGNATIONS

D	
C	
B	
A	

SHT 2 OF 5
BOM
DWG 81239-

SPECIFIC WIRE LEVEL DEFINITION FOR SYSTEM INTERCONNECT

For the purpose of routing wire and cables, three different levels are defined as follows:

POWER LEVEL

1. Power wiring – AC or DC
   a.) Variable frequency drive motor leads may be run with power level if they are braided tray cable (75% minimum coverage) grounded at both ends, or run in their own metallic conduit (grounded at both ends). Otherwise they must be run in their own separate cable tray or raceway.
2. Control wiring greater than 50 volts.

MEDIUM LEVEL

1. Control wiring less than 50 volts.
2. Tachometer leads.
3. Signal wiring, i.e. 4–20 milliamps, 0–10 volts DC (speed pots, etc.).
4. Thermocouple wires.
5. 24 volts DC circuits.
6. Low level wiring run in their own metallic conduit (grounded at both ends).

LOW LEVEL – Low level, high frequency cables such as:

1. RS 232, RS 485 communications.
2. PLC Communications Cable, i.e.
   a.) Allen Bradley Data Highway cable (Belden 9463 or equivalent).
   b.) Siemens Simantic Net Profibus Cable (6XV1 830–0AH10).
   c.) Ethernet 10 Base T cable (Cat. 5).
3. Pulse tachs (use Belden 9730 or equivalent).

   Note: For low level, high frequency cables less than 500 feet, 30 pf/ft or less is recommended. For cables greater than 500 feet, 15 pf/ft or less is recommended.

LEVEL SEPARATION

TABLE 1
TRAY SPACING IN INCHES (CM)

LEVEL	L	M	P
L	0 (0)	1 (3)	26 (66)
M	1 (3)	0 (0)	18 (46)
P	26 (66)	18 (46)	0 (0)

Minimum distance in inches (cm) between top of one tray and bottom of tray above or between the sides of adjacent trays.

TABLE 2
CONDUIT SPACING IN INCHES (CM)

LEVEL	L	M	P
L	0 (0)	1 (3)	12 (31)
M	1 (3)	0 (0)	9 (23)
P	12 (31)	9 (23)	0 (0)

Minimum distance in inches (cm) between the outside surfaces of conduits being run in banks.

GENERAL NOTES ON LEVEL SEPARATION

1. When unlike signal levels must cross either in trays or raceways, they should cross at 90° angles at maximum possible spacing. Where it is not possible to maintain a minimum spacing, a grounded steel barrier should be placed between unlike levels at the crossover point.
2. When entering terminal equipment and the minimum spacing between levels cannot be maintained, parallel runs should not exceed 5 feet.

GENERAL NOTES FOR ROUTING OF LEVELS

1. JUNCTION BOXES

   Level separation should be maintained in junction boxes. If necessary, grounded barriers can be used if levels of separation can not be maintained.

2. FLOOR WIRING

   At times it is necessary to utilize random floor wiring (i.e., in operator control rooms or pulpits). In this case, the same level separation rules apply. Unlike levels should be separated and each level contained by some suitable means (i.e., cord ties). A tray network in the floor is recommended which will supply better shielding and a much more noise free environment.

3. ENTERING AND LEAVING CONDUITS AND TRAYS

   Care must be taken to assure level separation in transitional areas where cables are entering and leaving conduits and trays. It is advisable to use grounded steel barriers between unlike levels if proper separation cannot be maintained over five feet overall.

NOTE: Considerations with respect to distances and environment on wire size and type of wire to be used at the installation are the responsibility of the customer.

NOTE: These are minimum requirements. If your installation specifications exceed these, they must be followed.

GROUNDING OF CONTROL EQUIPMENT

I. GENERAL

With the use of highly complicated and noise sensitive control electronics today, it has become extremely important to separate control grounds and safety grounds. A simple example can be used to illustrate this point. In the case of a transformer feeding a motor, the result of a fault at the motor would be a voltage appearing near the ground connection of the transformer and motor with respect to the rest of the ground system. If the control ground was connected near this point, it would see the same disturbance as the power equipment which would cause signal errors and erroneous operation.

In general, a safety ground is used for protection of equipment and personnel. This ground is the tie between the control chassis and the grounding system and is subject to applicable federal, state and local codes. The control ground (clean ground) is a common return system that is tied to the system ground at a sufficient distance from all safety grounds (dirty grounds).

II. SAFETY GROUND

At any installation, all electrical equipment must be connected to the safety ground system. The electrical connection is run in accordance with local codes and should be connected to the nearest point on the ground system. As stated previously, the size and insulation requirements of this ground wire are determined by local code. The minimum cable size however, is recommended to be 1/0.

III. CONTROL COMMON

A Control Common bus is to be installed where applicable in a noise free area (i.e.. away from contactors and power wires). This bus will be insulated from chassis and all control commons for the cubicle (BS, M, COM, etc.) should be connected to it in a star configuration so as to prevent possible ground loops.
Ideally, this bus should be at the bottom of the enclosure for ease of customer connections. Provision should be made for the customer to connect a 1/0 insulated cable from this bus to a clean ground in his plant. This customer connection should be indicated on the custom schematic.

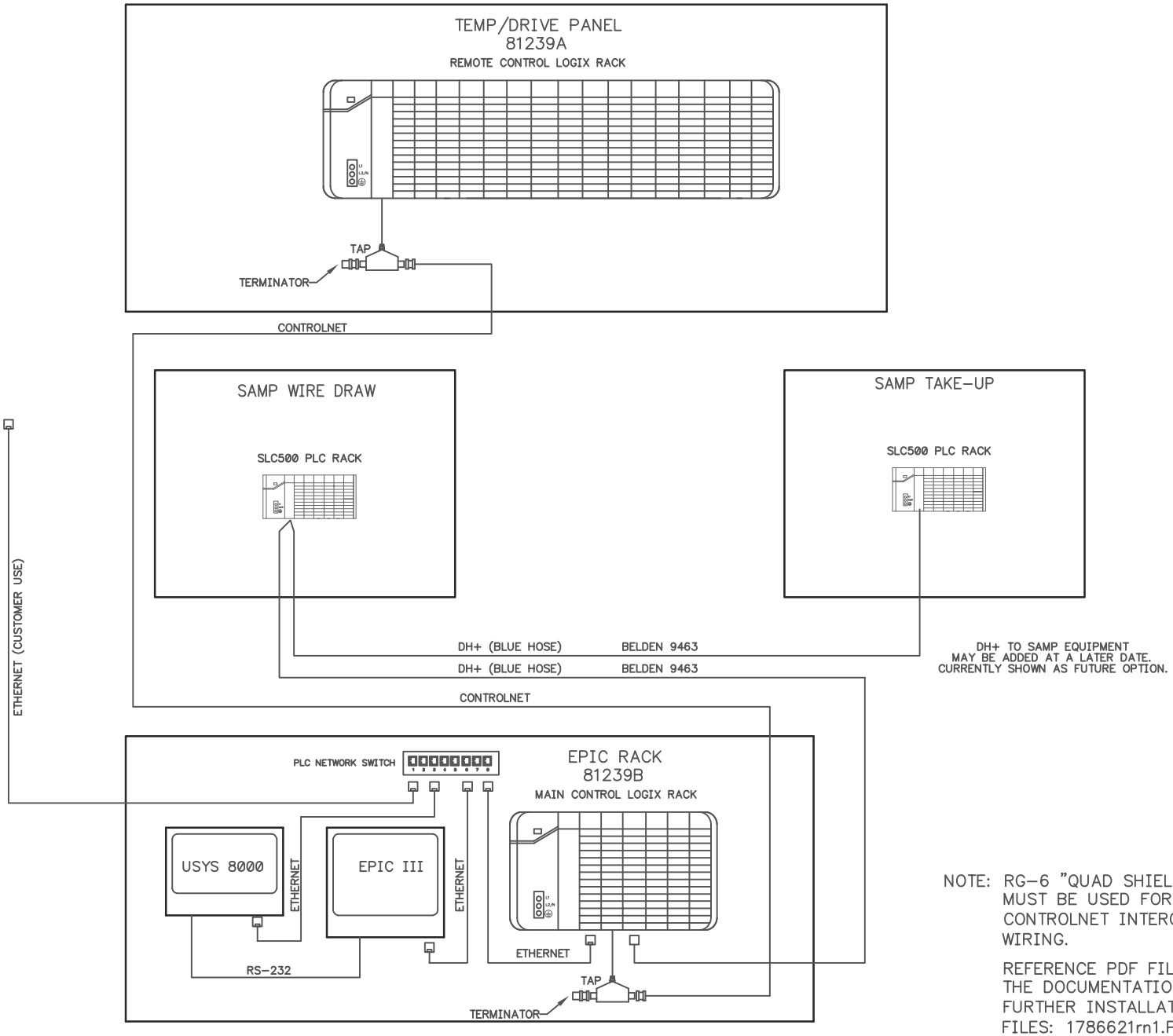

NOTE: RG-6 "QUAD SHIELD" CABLE MUST BE USED FOR ALL CONTROLNET INTERCONNECT WIRING.

REFERENCE PDF FILES ON THE DOCUMENTATION CD FOR FURTHER INSTALLATION DETAILS. FILES: 1786621rn1.PDF & 1786-in009b-en-p.PDF

Davis-Standard® CONTROLS
1 Extrusion Drive
Pawcatuck, CT 06379
Tel : (860) 599-1010
Fax : (860) 599-2952
www.Davis-Standard.com

DATE	11/21/05
ENG	DAG
CAD	81239-05
MSTR	PC31-

HONEYWELL GENESIS CABLE

INSTALLATION & WIRING
COMMUNICATIONS

D	
C	
B	
A	

SHT 5 OF 5
BOM
DWG 81239-

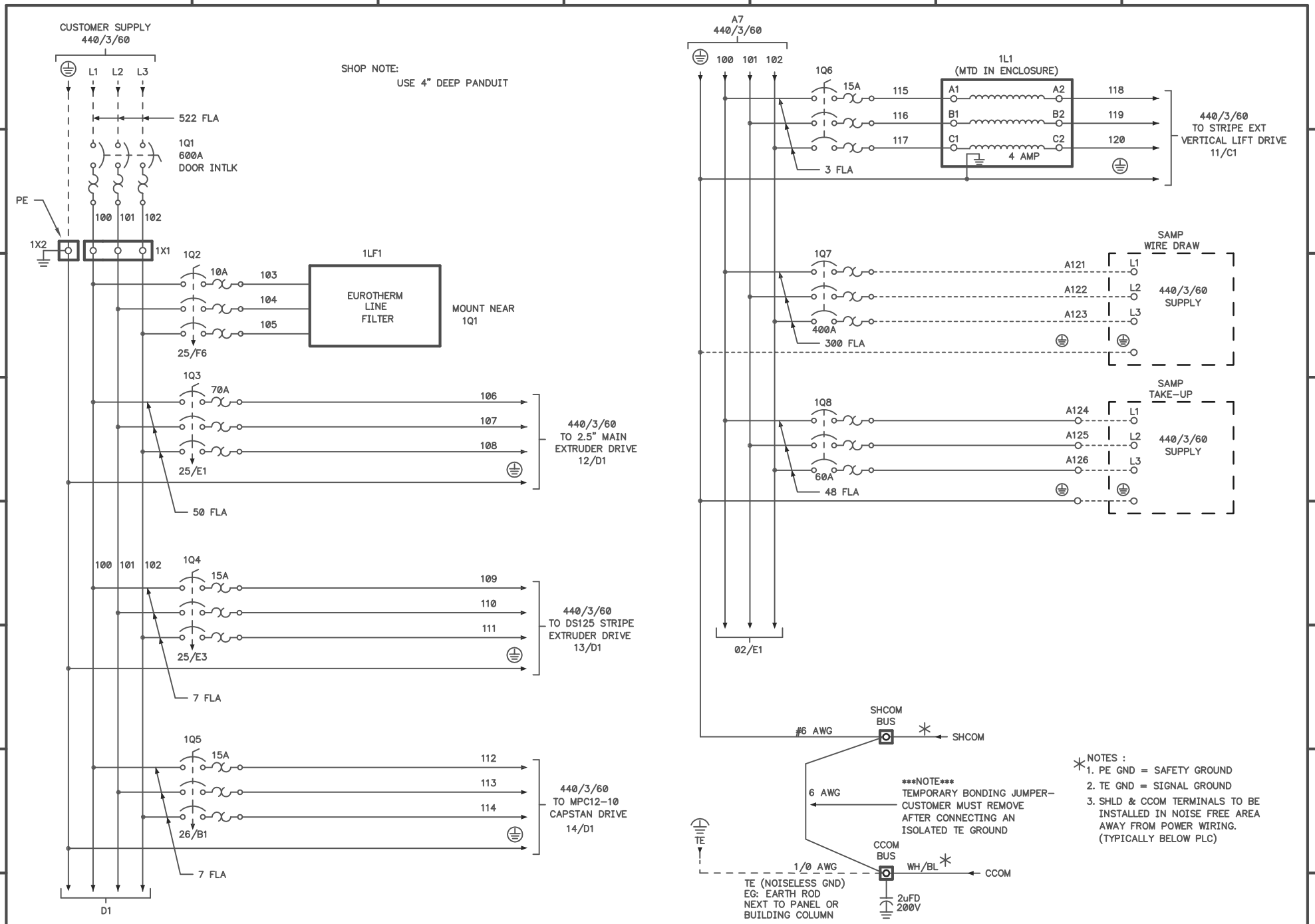

Davis-Standard® CONTROLS

1 Extrusion Drive
Pawcatuck, CT 06379
Tel : (860) 599-1010
Fax : (860) 599-2952
www.Davis-Standard.com

DATE	11/21/05
ENG	DAG
CAD	81239A01
MSTR	

HONEYWELL GENESIS CABLE

WIRING DIAGRAM
POWER DISTRIBUTION

D	
C	
B	
A	

SHT 1 OF 36
BOM BD803
DWG 81239A

11/5/2009 8:04:16 AM, FINAL - Approved for Installation

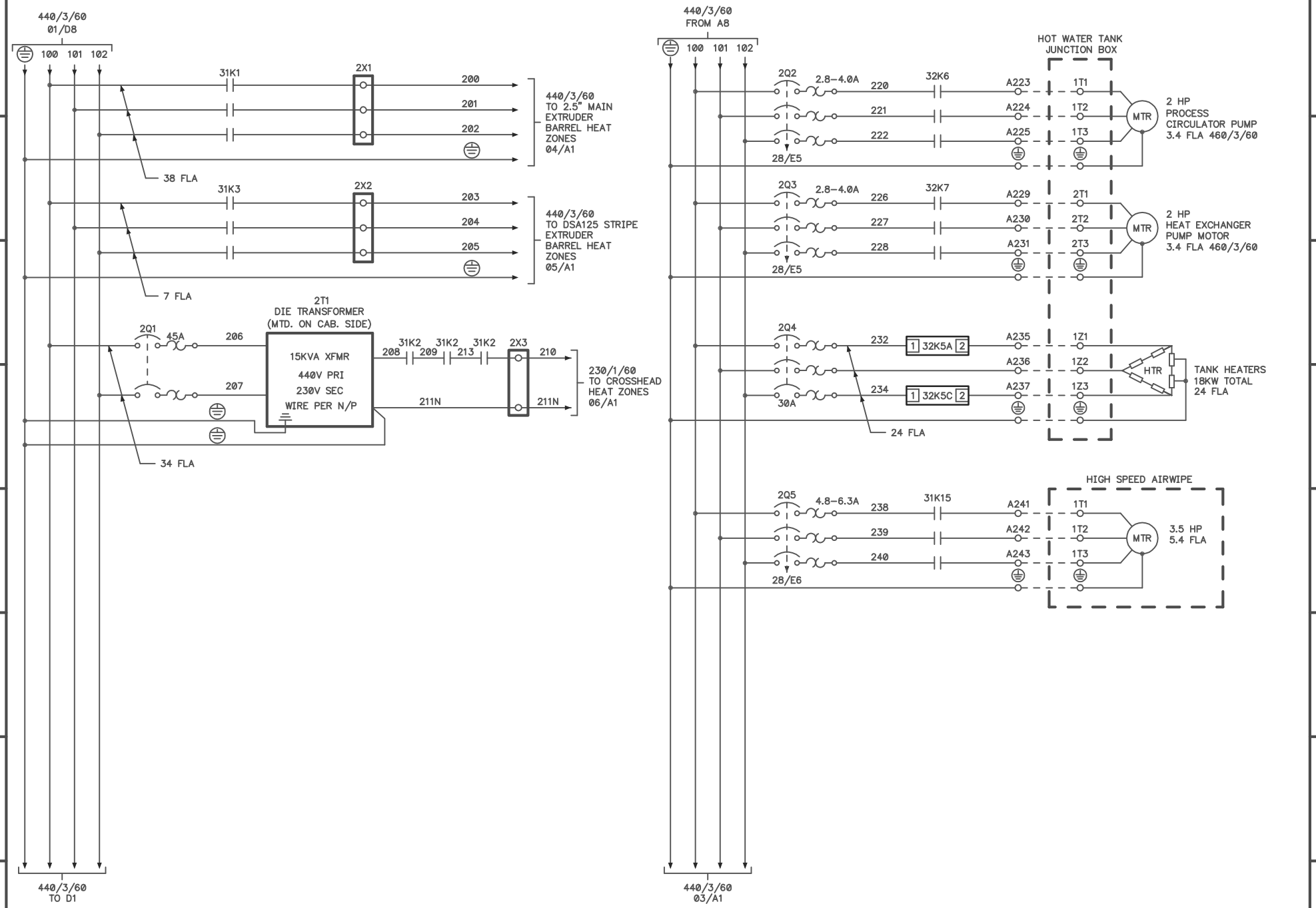

Davis-Standard® CONTROLS

1 Extrusion Drive
Pawcatuck, CT 06379
Tel : (860) 599-1010
Fax : (860) 599-2952
www.Davis-Standard.com

DATE	11/14/05
ENG	DAG
CAD	81239A02
MSTR	

HONEYWELL GENESIS CABLE

WIRING DIAGRAM
POWER DISTRIBUTION

D	
C	
B	
A	

SHT 2 OF 36
BOM BD803
DWG 81239A

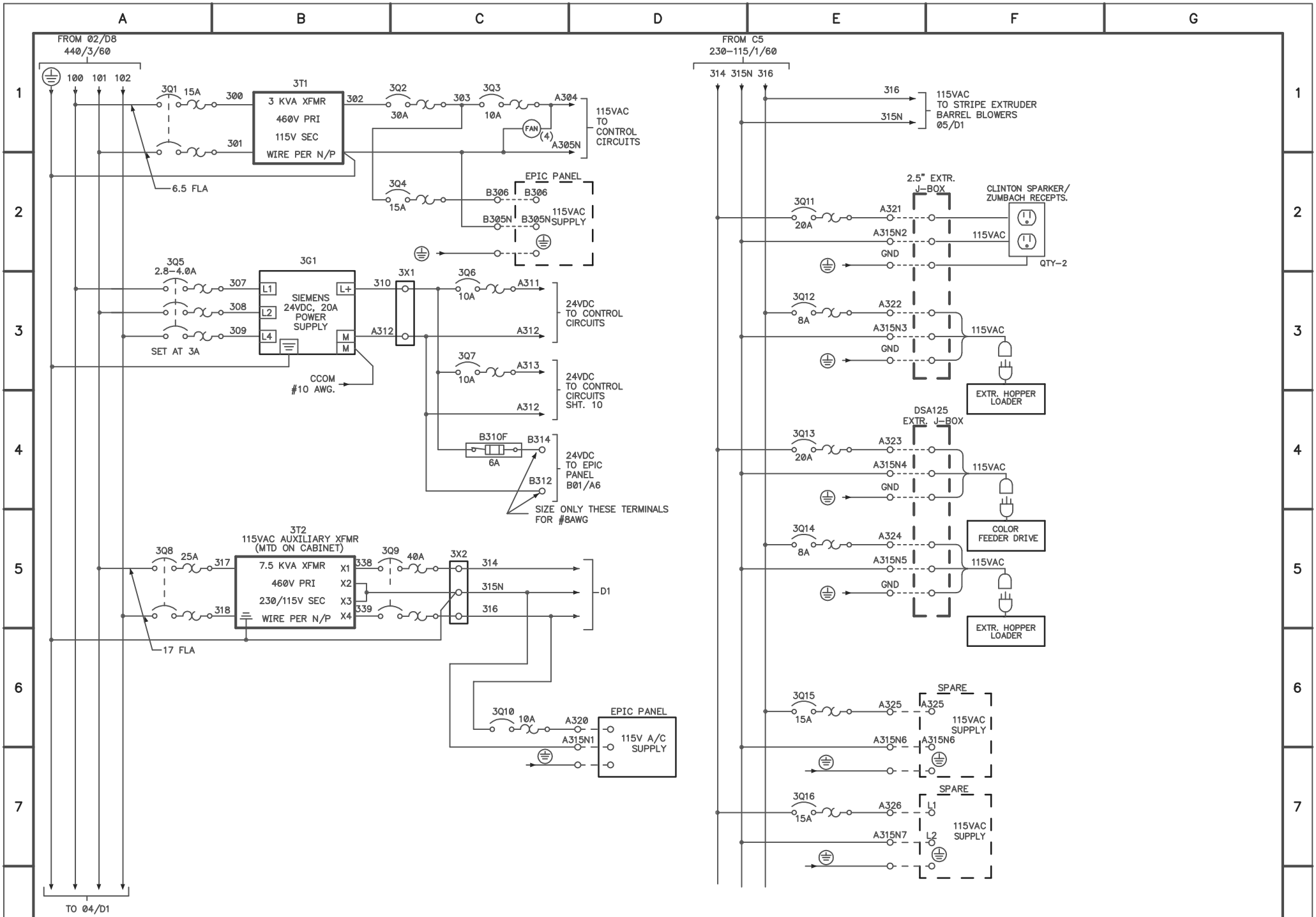

Davis-Standard® CONTROLS

1 Extrusion Drive
Pawcatuck, CT 06379
Tel : (860) 599-1010
Fax : (860) 599-2952
www.Davis-Standard.com

DATE	08/05/06
ENG	DAG
CAD	81239A03
MSTR	

HONEYWELL GENESIS CABLE

WIRING DIAGRAM
POWER DISTRIBUTION

D	
C	
B	
A	

SHT 3 OF 43
BOM BD803
DWG 81239A

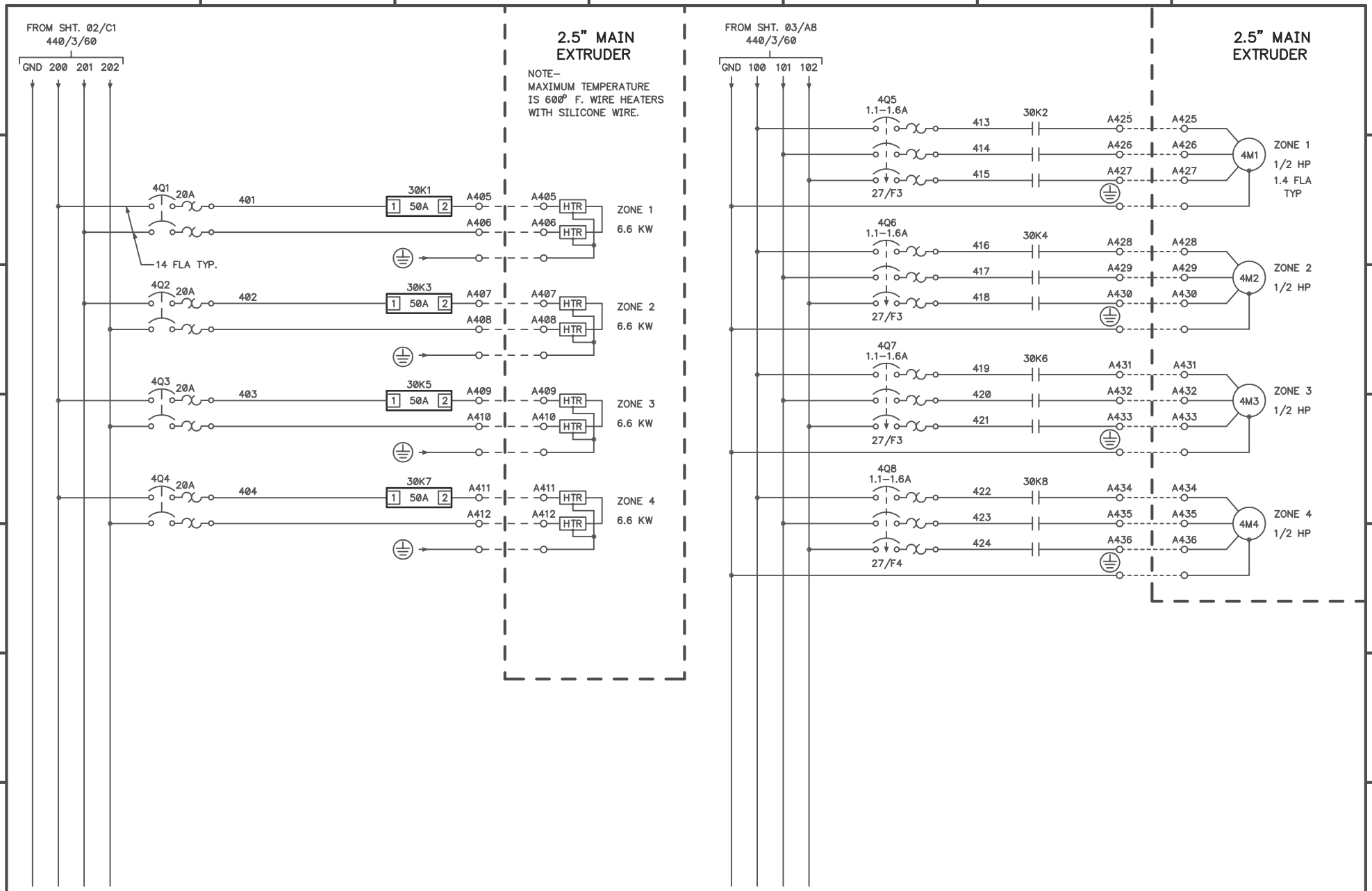

Davis-Standard® CONTROLS

1 Extrusion Drive
Pawcatuck, CT 06379
Tel : (860) 599-1010
Fax : (860) 599-2952
www.Davis-Standard.com

DATE	09/30/05
ENG	DAG
CAD	81239A04
MSTR	

HONEYWELL GENESIS CABLE

WIRING DIAGRAM
2.5" EXTRUDER HEAT ZONES

D	
C	
B	
A	

SHT 4 OF 36
BOM BD803
DWG 81239A

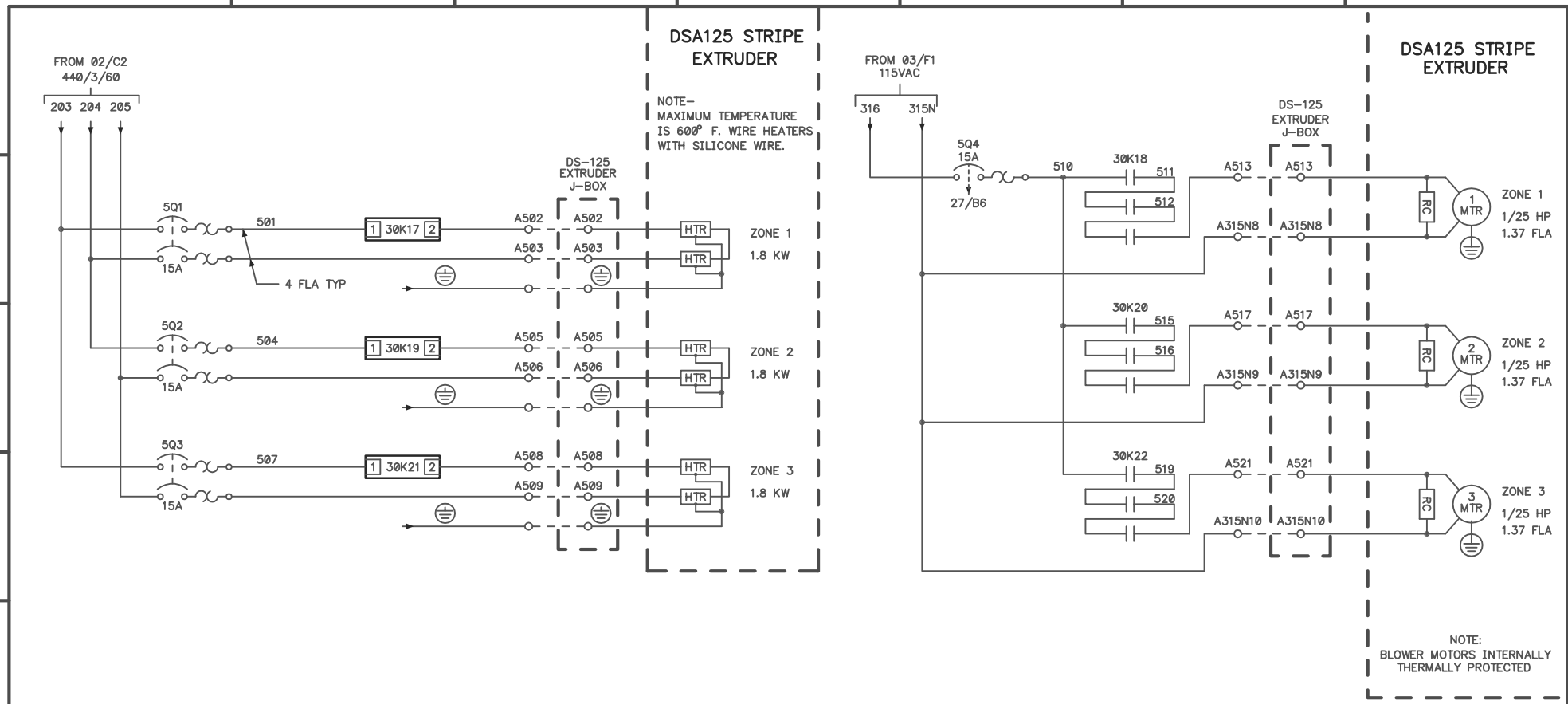

Davis-Standard® CONTROLS

1 Extrusion Drive
Pawcatuck, CT 06379
Tel : (860) 599-1010
Fax : (860) 599-2952
www.Davis-Standard.com

DATE	09/30/05
ENG	DAG
CAD	81239A05
MSTR	

HONEYWELL GENESIS CABLE

WIRING DIAGRAM
POWER DISTRIBUTION
DSA125 EXT BRL HEAT ZONES

D	
C	
B	
A	

SHT 5 OF 36
BOM BD803
DWG 81239A

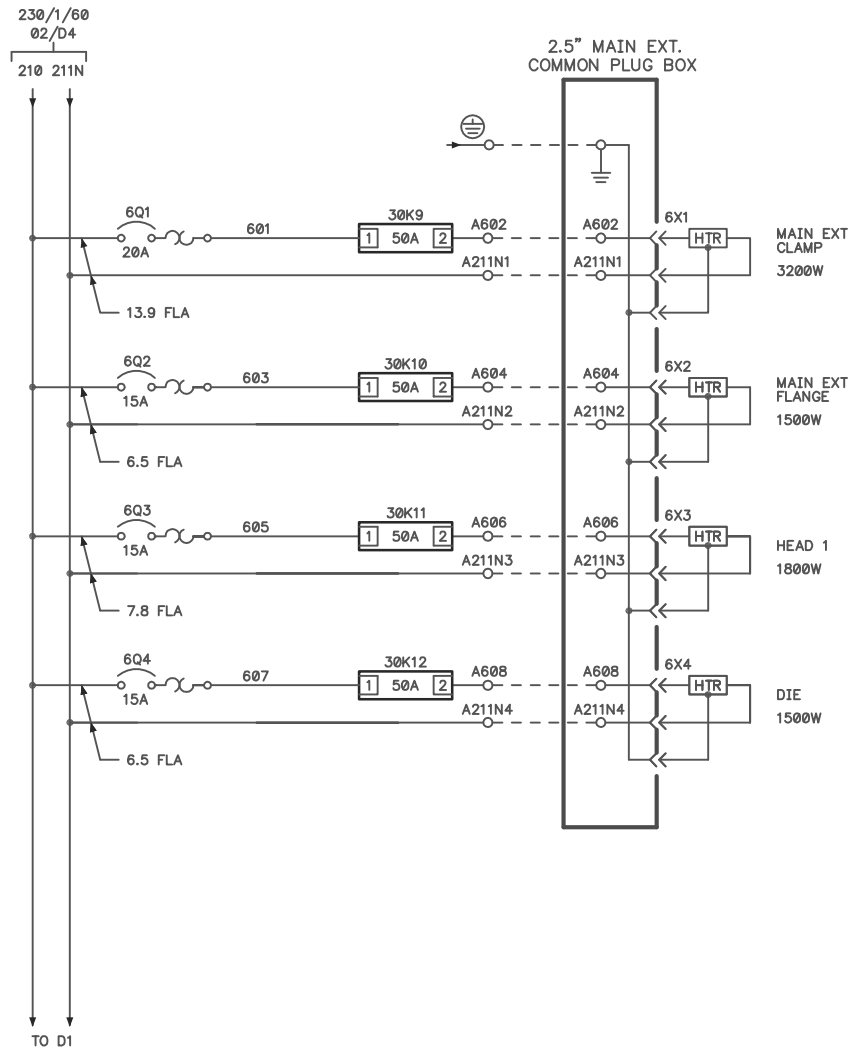

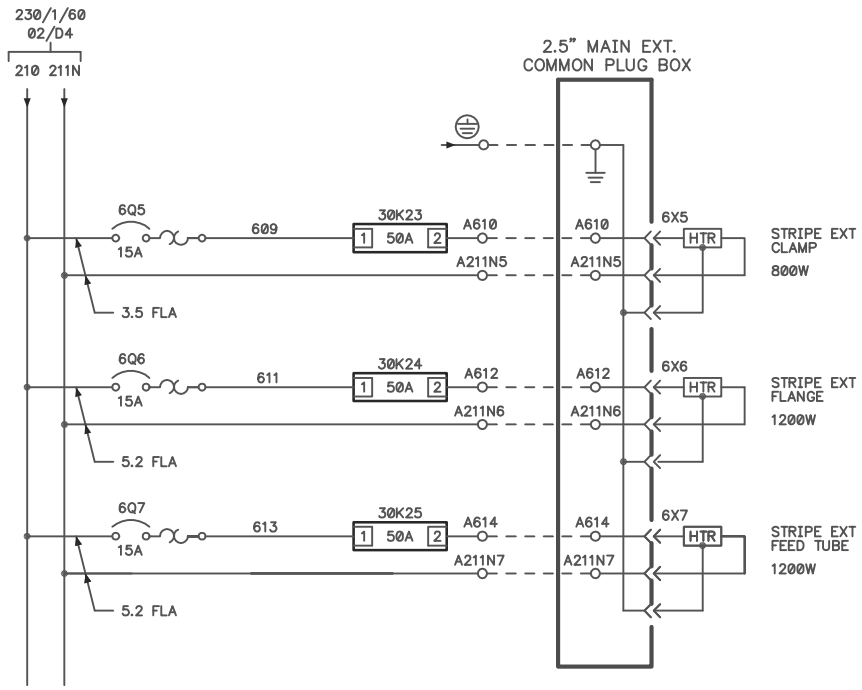

Davis-Standard® CONTROLS

1 Extrusion Drive
Pawcatuck, CT 06379
Tel : (860) 599-1010
Fax : (860) 599-2952
www.Davis-Standard.com

DATE	08/05/06
ENG	DAG
CAD	81239A06
MSTR	

HONEYWELL GENESIS CABLE

WIRING DIAGRAM
POWER DISTRIBUTION

D	
C	
B	
A	

SHT 6 OF 36
BOM BD803
DWG 81239A

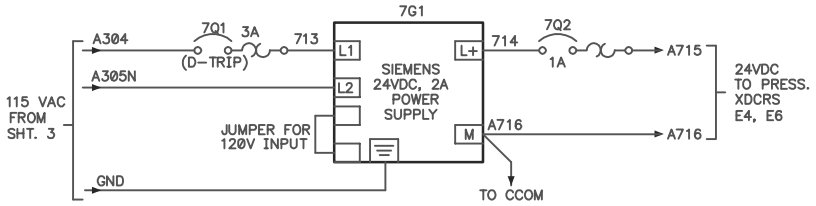

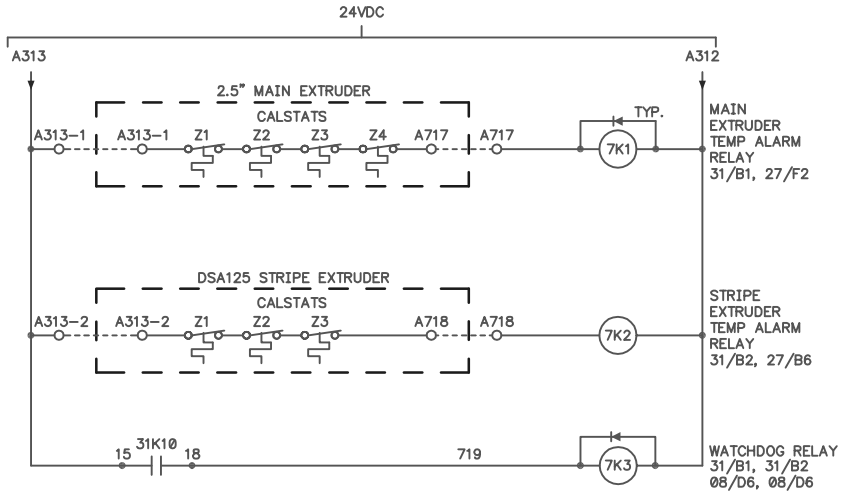

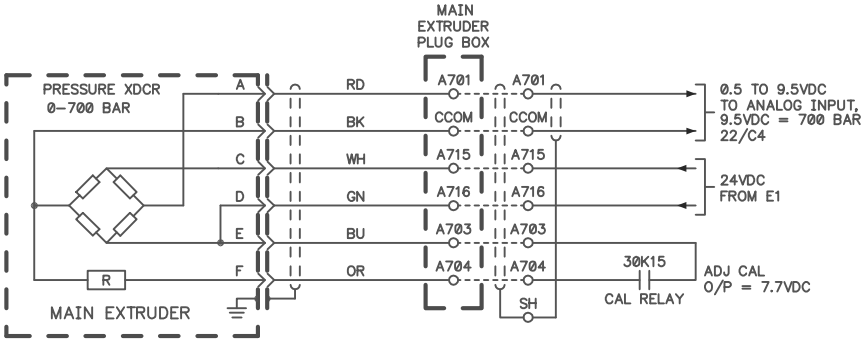

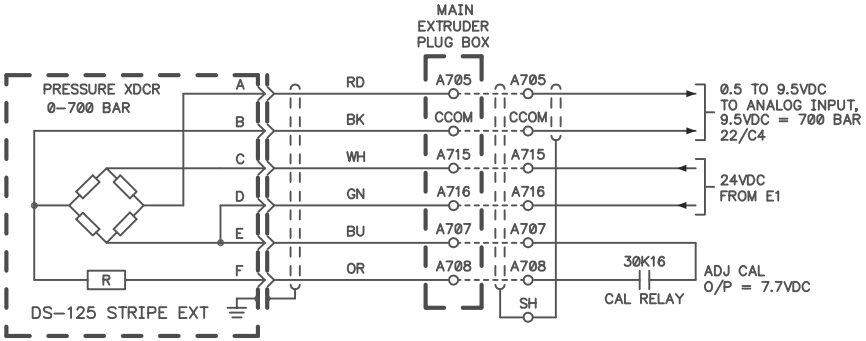

Davis-Standard® CONTROLS
1 Extrusion Drive
Pawcatuck, CT 06379
Tel : (860) 599-1010
Fax : (860) 599-2952
www.Davis-Standard.com

DATE	08/05/06
ENG	DAG
CAD	81239A07
MSTR	

HONEYWELL GENESIS CABLE

WIRING DIAGRAM
CONTROL LOGIC

D	
C	
B	
A	

SHT	7 OF 36
BOM	BD803
DWG	81239A

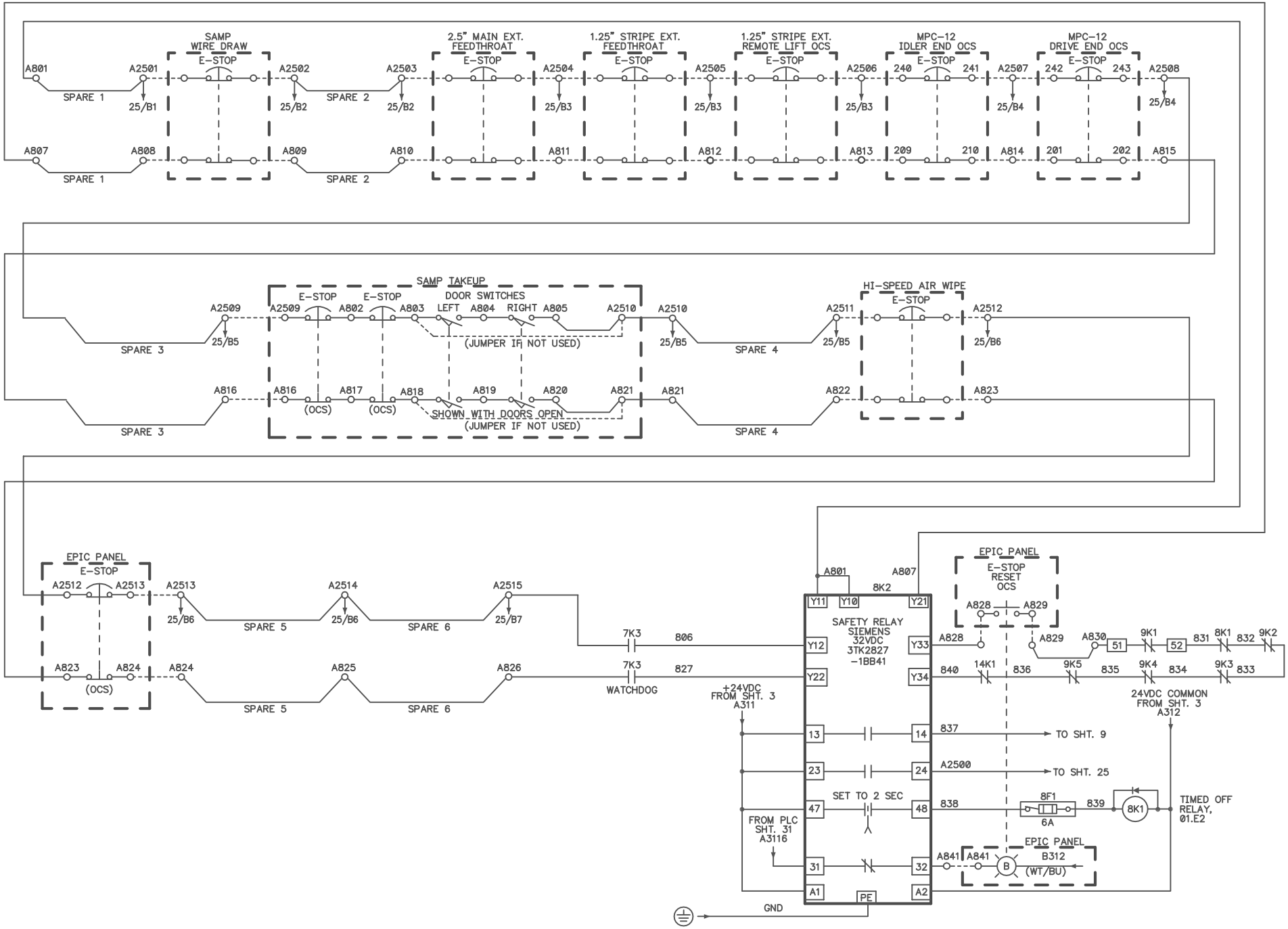

Davis-Standard® CONTROLS	1 Extrusion Drive Pawcatuck, CT 06379 Tel : (860) 599-1010 Fax : (860) 599-2952 www.Davis-Standard.com	DATE 11/07/05 ENG DAG CAD 81239A08 MSTR	HONEYWELL GENESIS CABLE	WIRING DIAGRAM EXTRUDER CONTROL E-STOP LOGIC	D C B A
					SHT 8 OF 36 BOM BD803 DWG 81239A

11/5/2009 8:04:57 AM, FINAL - Approved for Installation

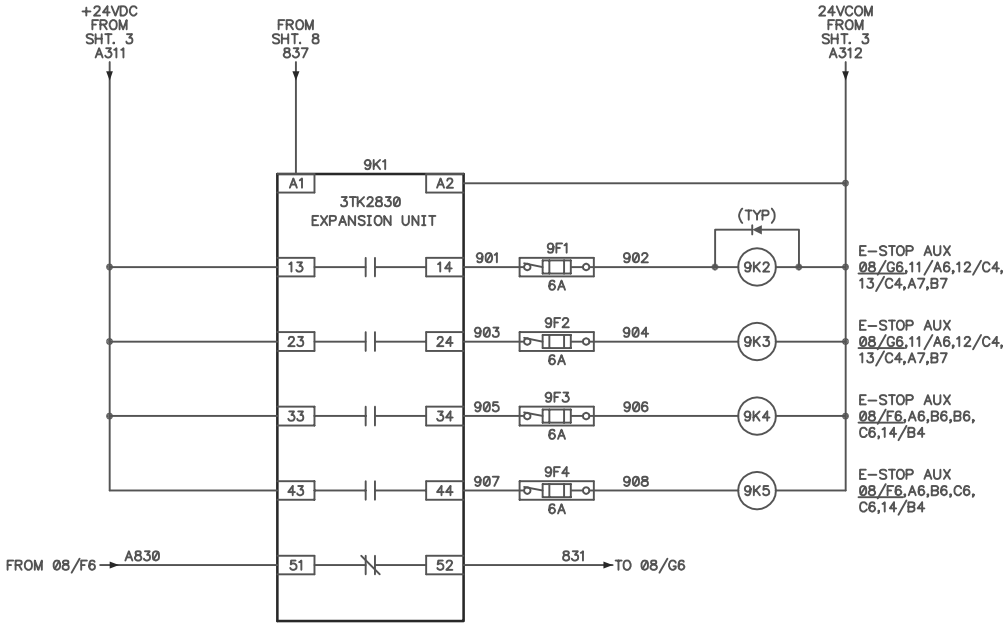

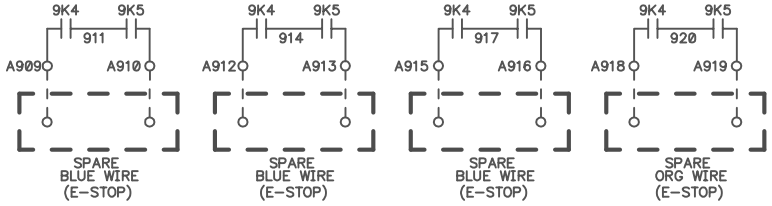

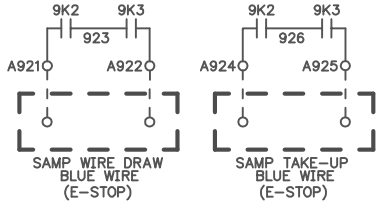

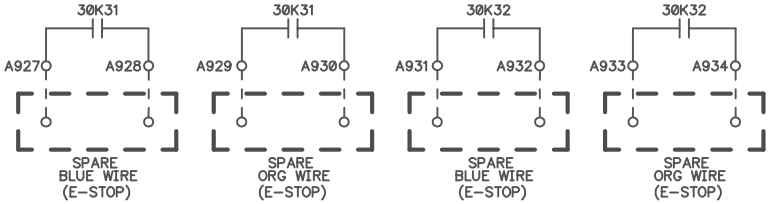

Davis-Standard® CONTROLS
1 Extrusion Drive
Pawcatuck, CT 06379
Tel : (860) 599-1010
Fax : (860) 599-2952
www.Davis-Standard.com

DATE	10/03/05
ENG	DAG
CAD	81239A09
MSTR	

HONEYWELL GENESIS CABLE

WIRING DIAGRAM
CONTROL LOGIC

D	
C	
B	
A	

SHT	9 OF 36
BOM	BD803
DWG	81239A

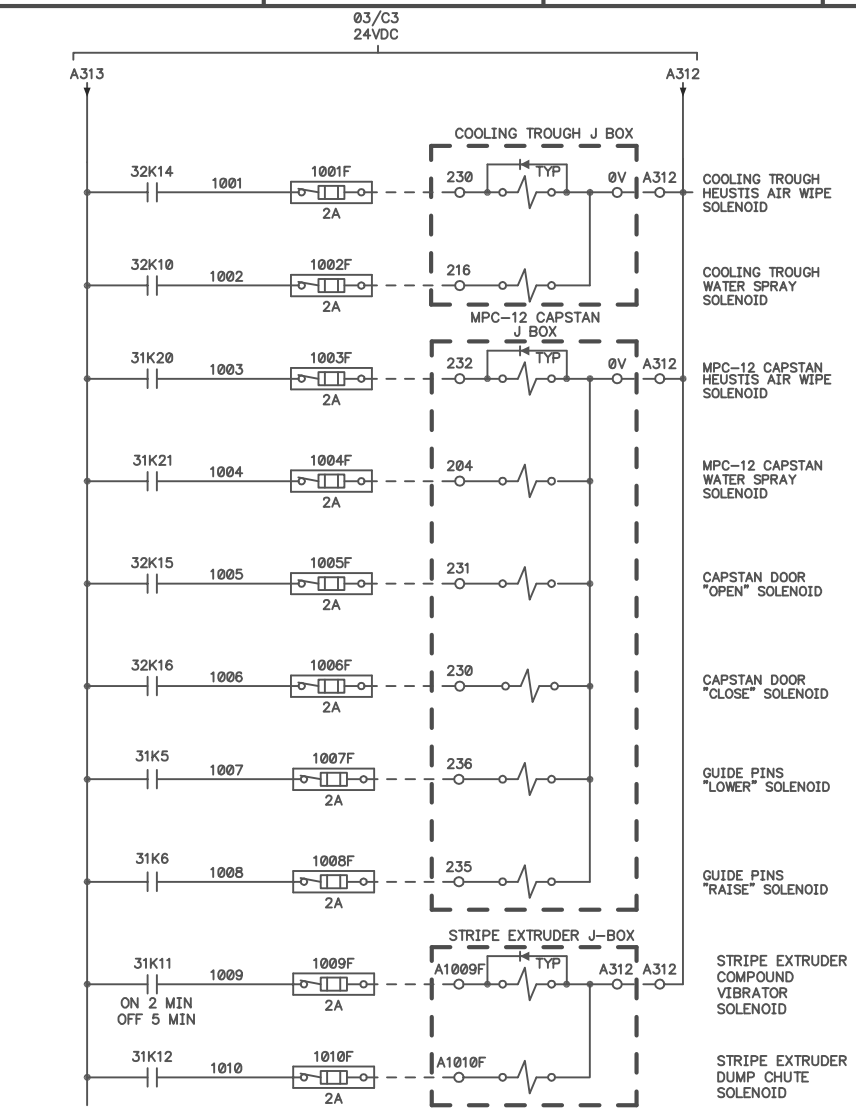

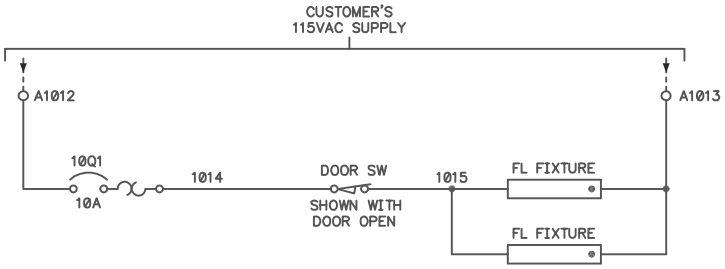

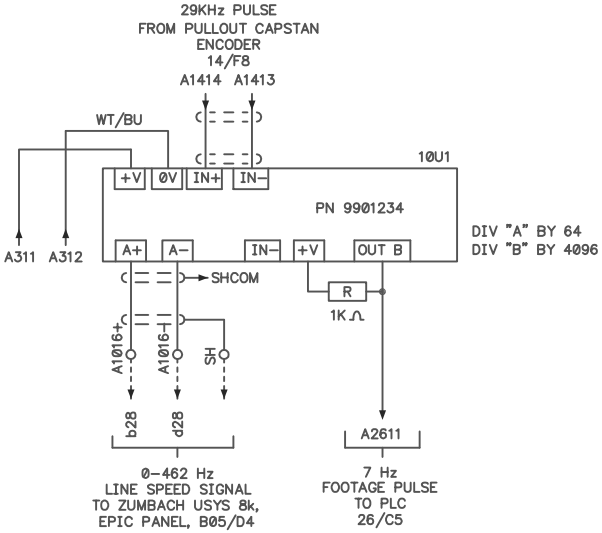

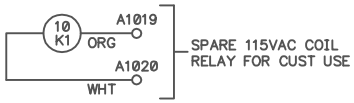

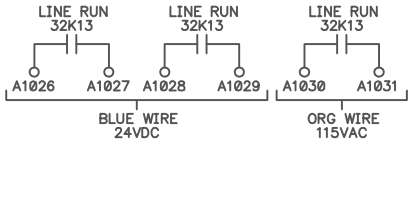

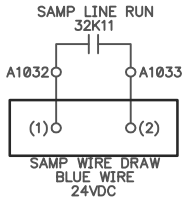

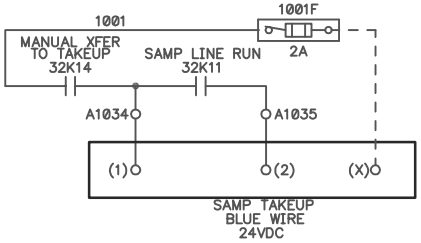

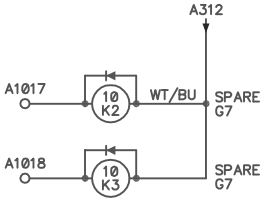

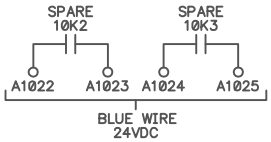

Davis-Standard® CONTROLS
1 Extrusion Drive
Pawcatuck, CT 06379
Tel : (860) 599-1010
Fax : (860) 599-2952
www.Davis-Standard.com

DATE	08/05/06
ENG	DAG
CAD	81239A10
MSTR	

HONEYWELL GENESIS CABLE

WIRING DIAGRAM
CONTROL LOGIC

D	
C	
B	
A	

SHT 10 OF 36
BOM BD803
DWG 81239A

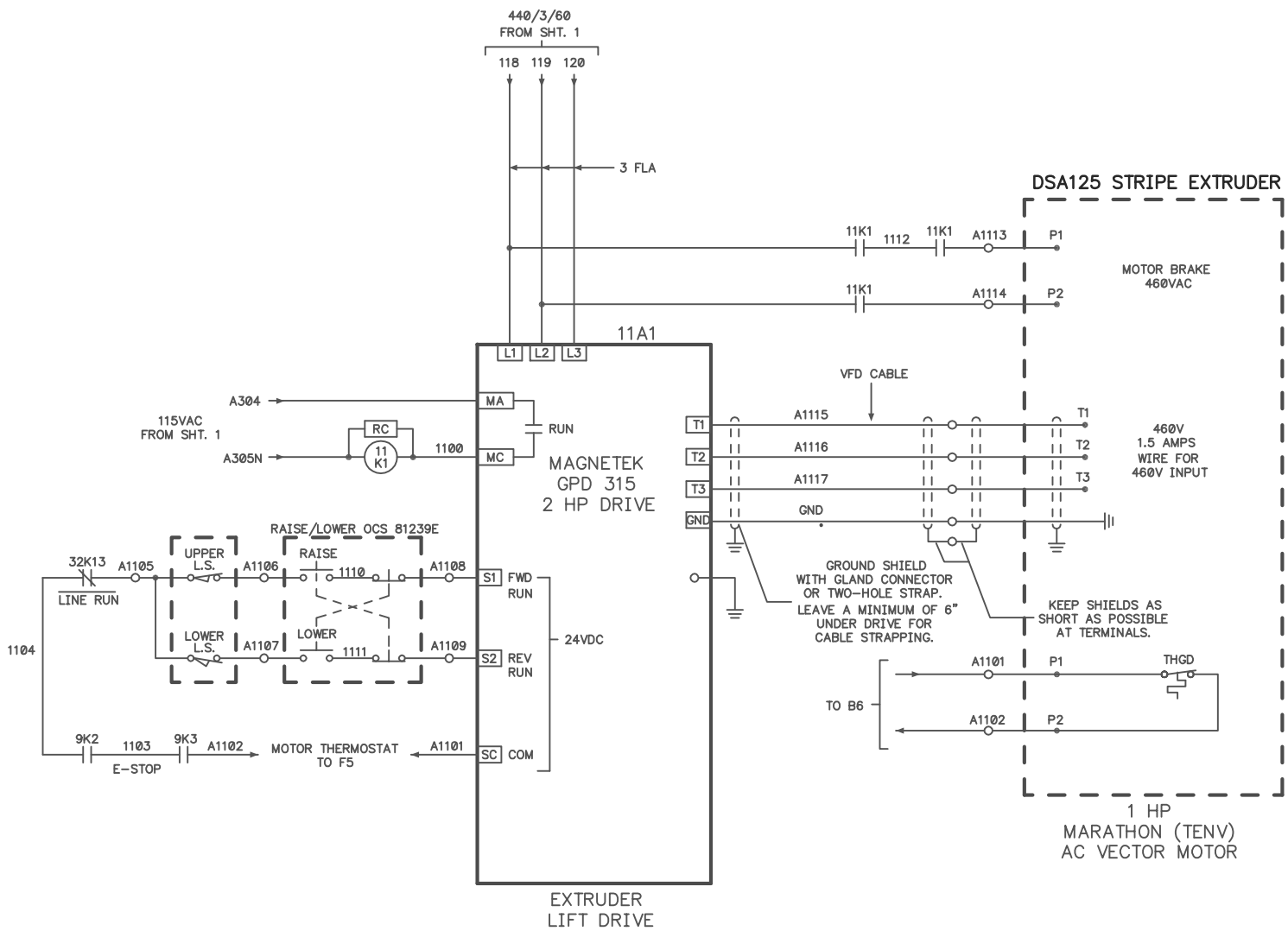

DRIVE PARAMETERS

NO.	PARAM. NAME	USER SETTING
n001	INIT.	10
n002	CONTROL METHOD	0
n003	OP METHOD	1
n004	REF SEL	1
n019	ACCEL TIME	10sec
n020	DECEL TIME	.5sec
n024	SET SPEED	60HZ
n036	MOTOR AMPS	1.5
n057	RELAY OUTPUT=RUN	1
n096	OL DETECT	2
n098	OL DETECT LEVEL	105%
n099	OL DETECT TIME	10sec

NOTE: PARAMETER LIST IS RECOMMENDED STARTING LIST AND MAY NOT CONTAIN ALL PARAMETERS REQUIRED TO SET UP DRIVE. SEE DRIVE MANUAL FOR COMPLETE LIST AND TUNING PROCEDURES

Davis-Standard® CONTROLS
1 Extrusion Drive
Pawcatuck, CT 06379
Tel : (860) 599-1010
Fax : (860) 599-2952
www.Davis-Standard.com

DATE	11/23/05
ENG	DAG
CAD	81239A11
MSTR	

HONEYWELL GENESIS CABLE

WIRING DIAGRAM
EXTRUDER CONTROL
LIFT DRIVE

D	
C	
B	
A	

SHT 11 OF 36
BOM BD803
DWG 81239A

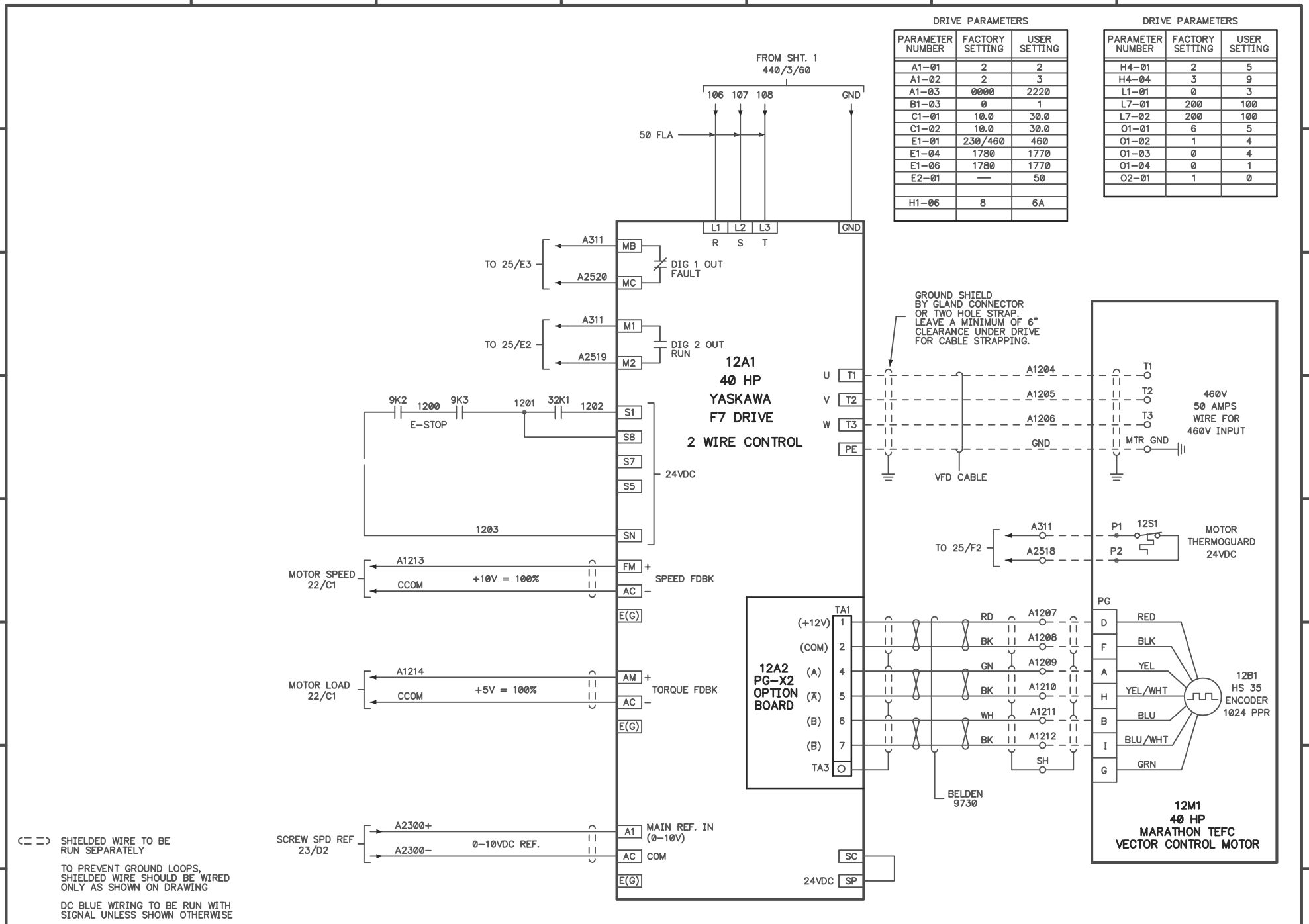

DRIVE PARAMETERS

PARAMETER NUMBER	FACTORY SETTING	USER SETTING
A1–01	2	2
A1–02	2	3
A1–03	0000	2220
B1–03	0	1
C1–01	10.0	30.0
C1–02	10.0	30.0
E1–01	230/460	460
E1–04	1780	1770
E1–06	1780	1770
E2–01	—	50
H1–06	8	6A

DRIVE PARAMETERS

PARAMETER NUMBER	FACTORY SETTING	USER SETTING
H4–01	2	5
H4–04	3	9
L1–01	0	3
L7–01	200	100
L7–02	200	100
O1–01	6	5
O1–02	1	4
O1–03	0	4
O1–04	0	1
O2–01	1	0

Davis-Standard® CONTROLS
1 Extrusion Drive
Pawcatuck, CT 06379
Tel : (860) 599-1010
Fax : (860) 599-2952
www.Davis-Standard.com

DATE	08/05/06
ENG	DAG
CAD	81239A12
MSTR	DR48–

HONEYWELL GENESIS CABLE

WIRING DIAGRAM
EXTRUDER CONTROL
2.5" EXTR DRIVE CONTROL

D	
C	
B	
A	

SHT 12 OF 36
BOM BD803
DWG 81239A

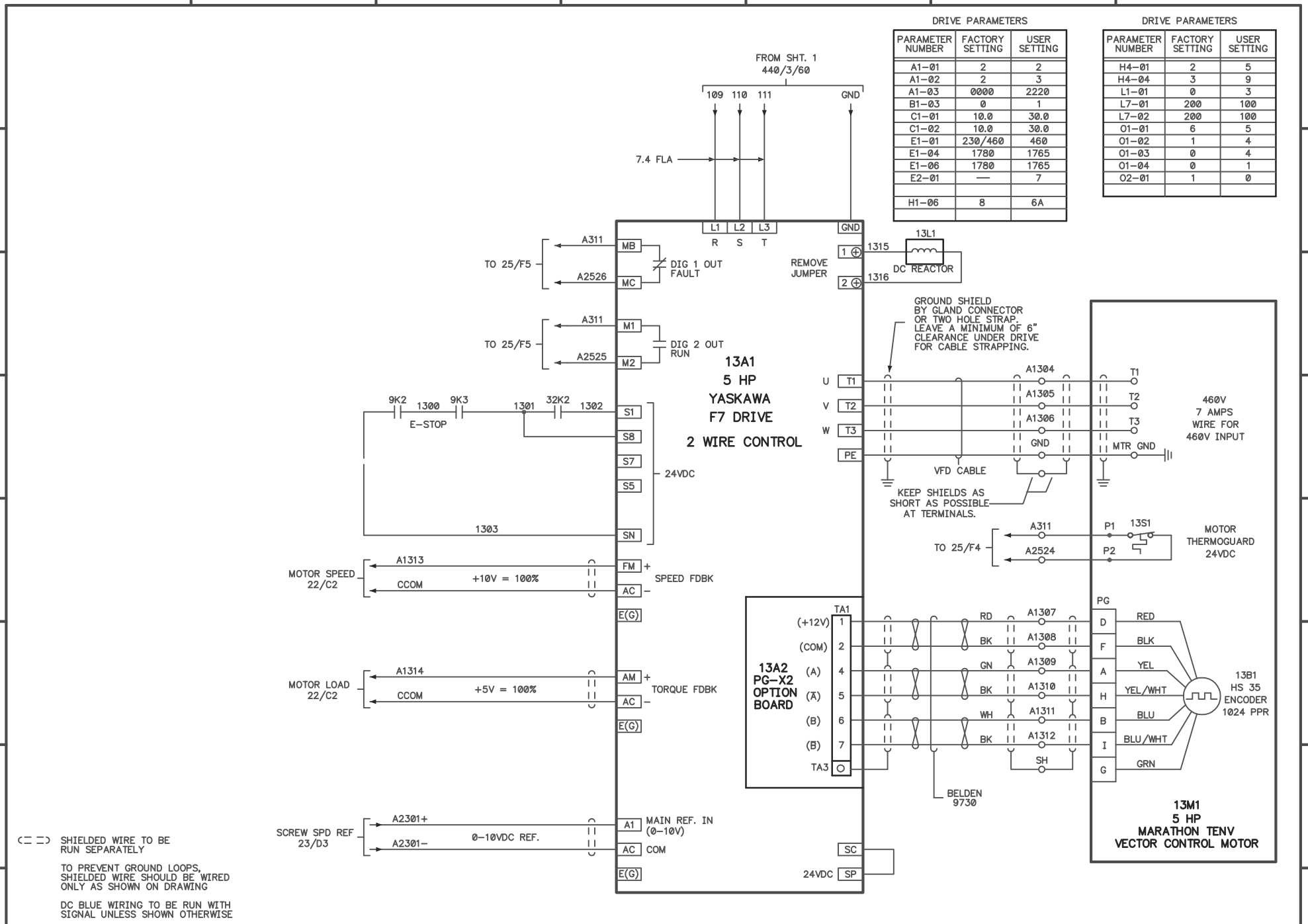

DRIVE PARAMETERS

PARAMETER NUMBER	FACTORY SETTING	USER SETTING
A1−01	2	2
A1−02	2	3
A1−03	0000	2220
B1−03	0	1
C1−01	10.0	30.0
C1−02	10.0	30.0
E1−01	230/460	460
E1−04	1780	1765
E1−06	1780	1765
E2−01	—	7
H1−06	8	6A

DRIVE PARAMETERS

PARAMETER NUMBER	FACTORY SETTING	USER SETTING
H4−01	2	5
H4−04	3	9
L1−01	0	3
L7−01	200	100
L7−02	200	100
O1−01	6	5
O1−02	1	4
O1−03	0	4
O1−04	0	1
O2−01	1	0

Davis-Standard® CONTROLS
1 Extrusion Drive
Pawcatuck, CT 06379
Tel : (860) 599-1010
Fax : (860) 599-2952
www.Davis-Standard.com

DATE	08/05/06
ENG	DAG
CAD	81239A13
MSTR	DR48−

HONEYWELL GENESIS CABLE

WIRING DIAGRAM
EXTRUDER CONTROL
DSA125 EXTR DRIVE CONTROL

D	
C	
B	
A	

SHT 13 OF 36
BOM BD803
DWG 81239A

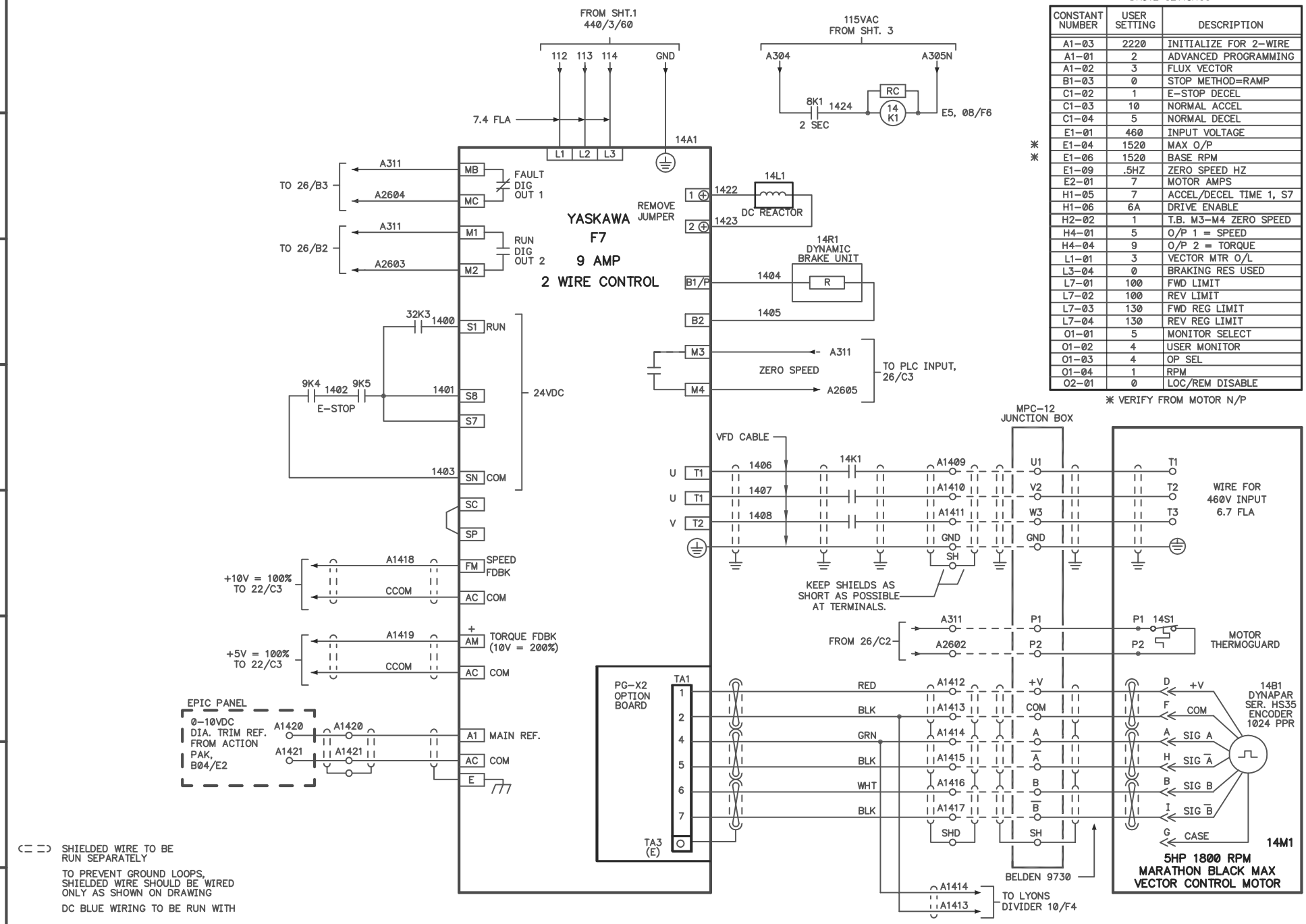

DRIVE SETTINGS

CONSTANT NUMBER	USER SETTING	DESCRIPTION
A1-03	2220	INITIALIZE FOR 2-WIRE
A1-01	2	ADVANCED PROGRAMMING
A1-02	3	FLUX VECTOR
B1-03	0	STOP METHOD=RAMP
C1-02	1	E-STOP DECEL
C1-03	10	NORMAL ACCEL
C1-04	5	NORMAL DECEL
E1-01	460	INPUT VOLTAGE
✱ E1-04	1520	MAX O/P
✱ E1-06	1520	BASE RPM
E1-09	.5HZ	ZERO SPEED HZ
E2-01	7	MOTOR AMPS
H1-05	7	ACCEL/DECEL TIME 1, S7
H1-06	6A	DRIVE ENABLE
H2-02	1	T.B. M3-M4 ZERO SPEED
H4-01	5	O/P 1 = SPEED
H4-04	9	O/P 2 = TORQUE
L1-01	3	VECTOR MTR O/L
L3-04	0	BRAKING RES USED
L7-01	100	FWD LIMIT
L7-02	100	REV LIMIT
L7-03	130	FWD REG LIMIT
L7-04	130	REV REG LIMIT
O1-01	5	MONITOR SELECT
O1-02	4	USER MONITOR
O1-03	4	OP SEL
O1-04	1	RPM
O2-01	0	LOC/REM DISABLE

✱ VERIFY FROM MOTOR N/P

Davis-Standard® CONTROLS
1 Extrusion Drive
Pawcatuck, CT 06379
Tel : (860) 599-1010
Fax : (860) 599-2952
www.Davis-Standard.com

DATE	08/05/06
ENG	DAG
CAD	81239A14
MSTR	

HONEYWELL GENESIS CABLE

WIRING DIAGRAM
MPC-12 CAPSTAN CONTROL
DRIVE CONTROL

D
C
B
A

SHT 14 OF 36
BOM BD803
DWG 81239A

BLANK SHEET

Davis-Standard® CONTROLS
1 Extrusion Drive
Pawcatuck, CT 06379
Tel : (860) 599-1010
Fax : (860) 599-2952
www.Davis-Standard.com

DATE	09/27/05
ENG	DAG
CAD	81239A15
MSTR	

HONEYWELL GENESIS CABLE

WIRING DIAGRAM
EXTRUDER CONTROL
BLANK SHEET

D	
C	
B	
A	

SHT 15 OF 36
BOM BD803
DWG 81239A

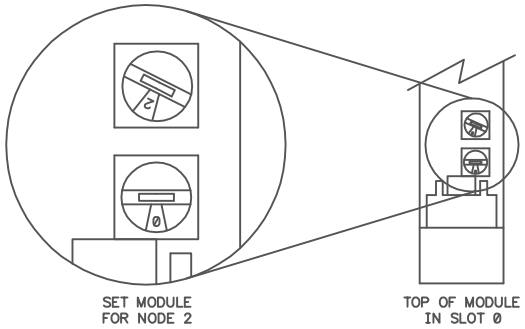

REMOTE RACK

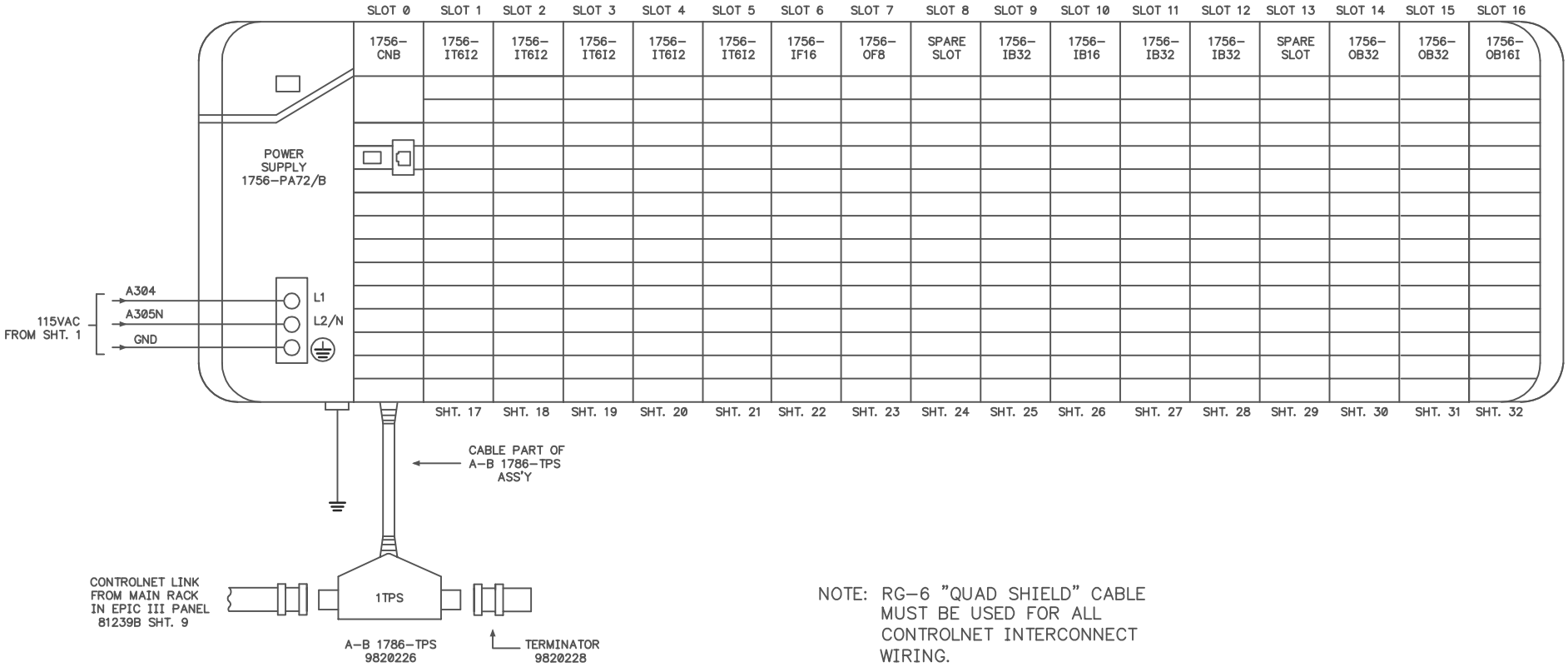

NOTE: RG-6 "QUAD SHIELD" CABLE MUST BE USED FOR ALL CONTROLNET INTERCONNECT WIRING.

REFERENCE PDF FILES ON THE DOCUMENTATION CD FOR FURTHER INSTALLATION DETAILS.
FILES: 1786621rn1.PDF & 1786-in009b-en-p.PDF

Davis-Standard® CONTROLS
1 Extrusion Drive
Pawcatuck, CT 06379
Tel : (860) 599-1010
Fax : (860) 599-2952
www.Davis-Standard.com

DATE	10/05/05
ENG	DAG
CAD	81239A16
MSTR	

HONEYWELL GENESIS CABLE

WIRING DIAGRAM
EXTRUDER CONTROL
PLC RACK LAYOUT

D	
C	
B	
A	

SHT	16 OF 36
BOM	BD803
DWG	81239A

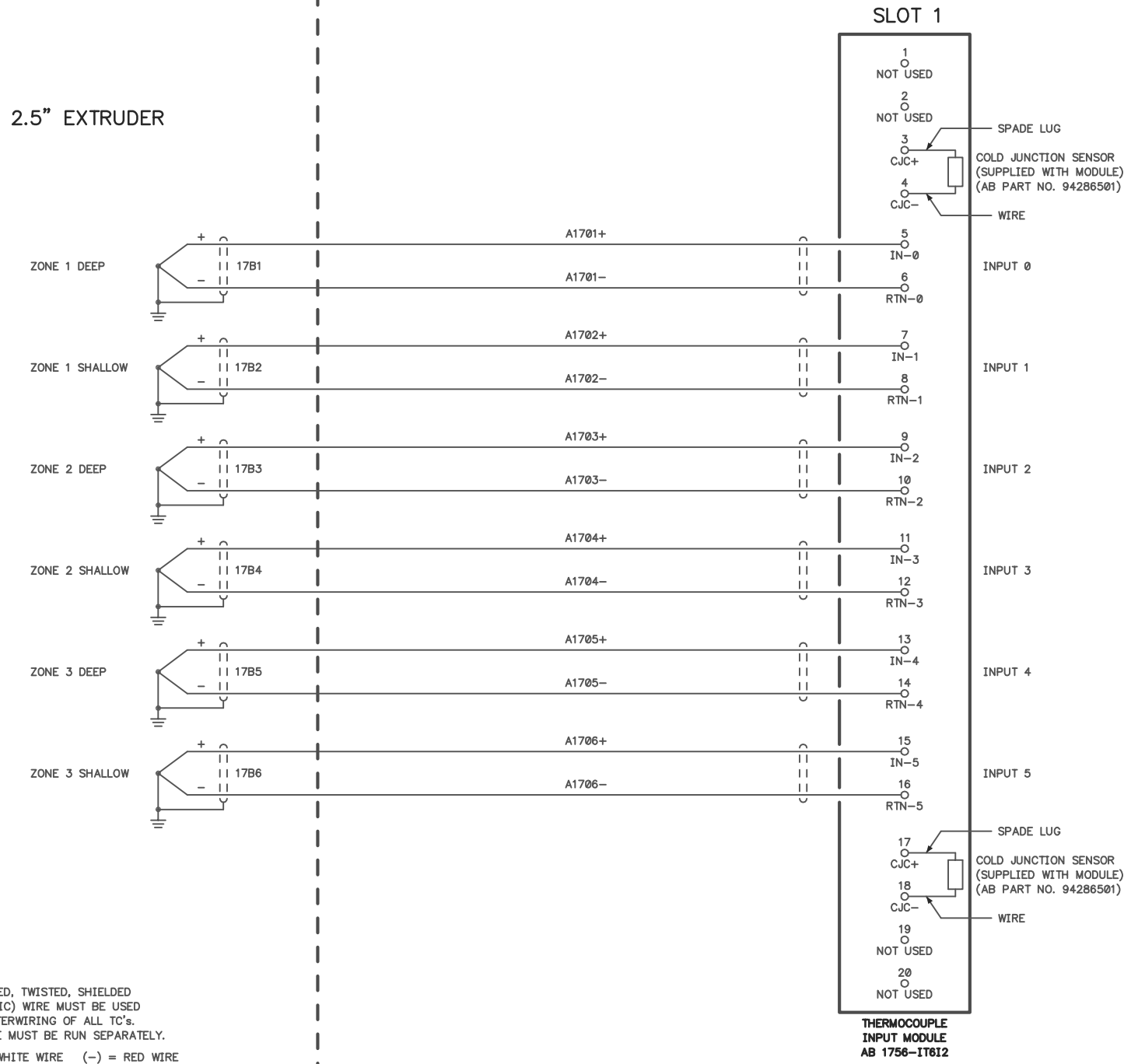

NOTES:

1) STRANDED, TWISTED, SHIELDED TYPE J(IC) WIRE MUST BE USED FOR INTERWIRING OF ALL TC's. TC WIRE MUST BE RUN SEPARATELY.

2) (+) = WHITE WIRE (−) = RED WIRE

Davis-Standard® CONTROLS
1 Extrusion Drive
Pawcatuck, CT 06379
Tel : (860) 599-1010
Fax : (860) 599-2952
www.Davis-Standard.com

DATE	09/27/05
ENG	DAG
CAD	81239A17
MSTR	

HONEYWELL GENESIS CABLE

WIRING DIAGRAM
EXTRUDER CONTROL
THERMOCOUPLE INPUT

D	
C	
B	
A	

SHT 17 OF 36
BOM BD803
DWG 81239A

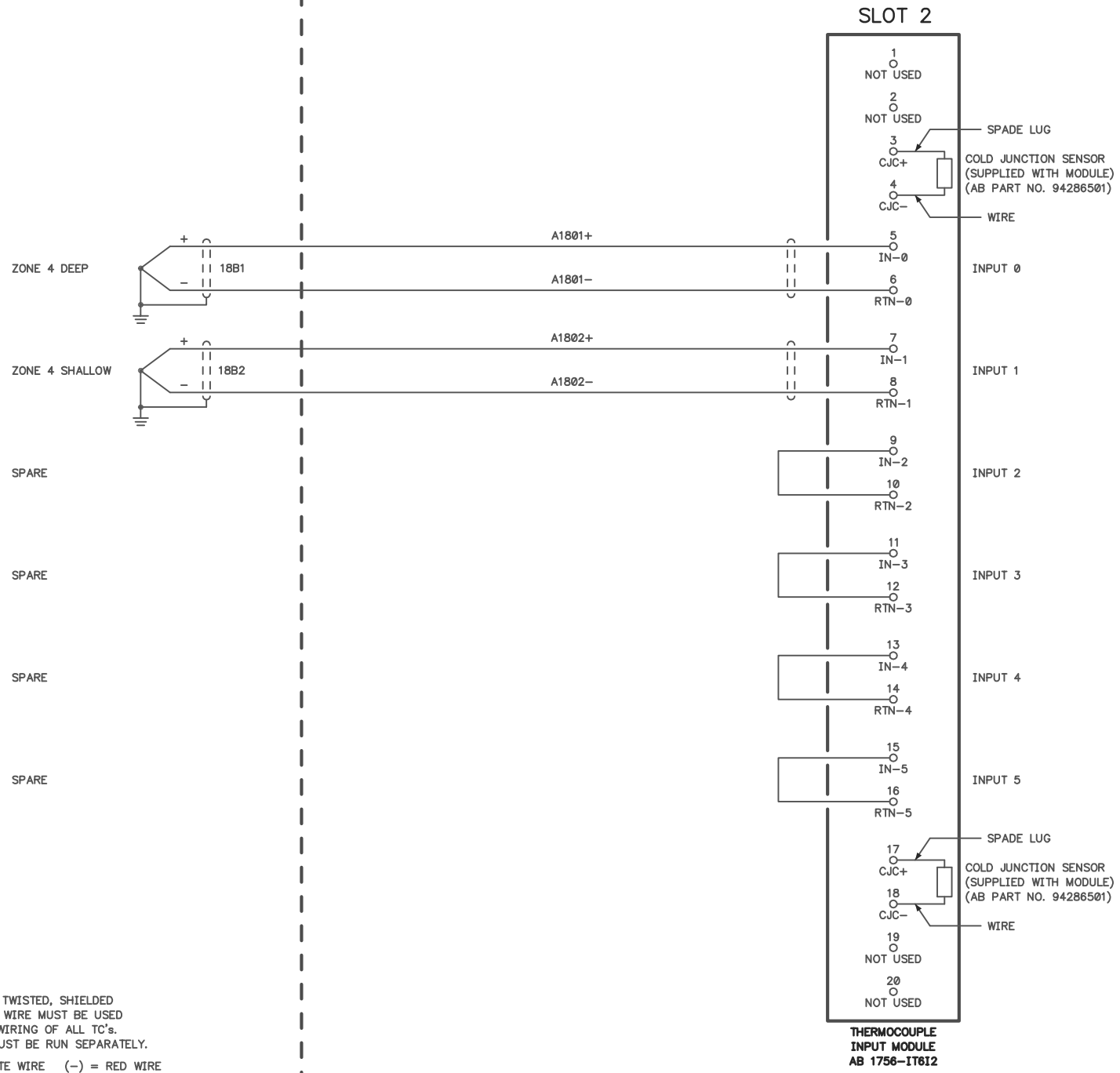

NOTES:

1) STRANDED, TWISTED, SHIELDED TYPE J(IC) WIRE MUST BE USED FOR INTERWIRING OF ALL TC's. TC WIRE MUST BE RUN SEPARATELY.

2) (+) = WHITE WIRE (−) = RED WIRE

Davis-Standard® CONTROLS
1 Extrusion Drive
Pawcatuck, CT 06379
Tel : (860) 599-1010
Fax : (860) 599-2952
www.Davis-Standard.com

DATE	09/27/05
ENG	DAG
CAD	81239A18
MSTR	

HONEYWELL GENESIS CABLE

WIRING DIAGRAM
EXTRUDER CONTROL
THERMOCOUPLE INPUT

D	
C	
B	
A	

SHT 18 OF 36
BOM BD803
DWG 81239A

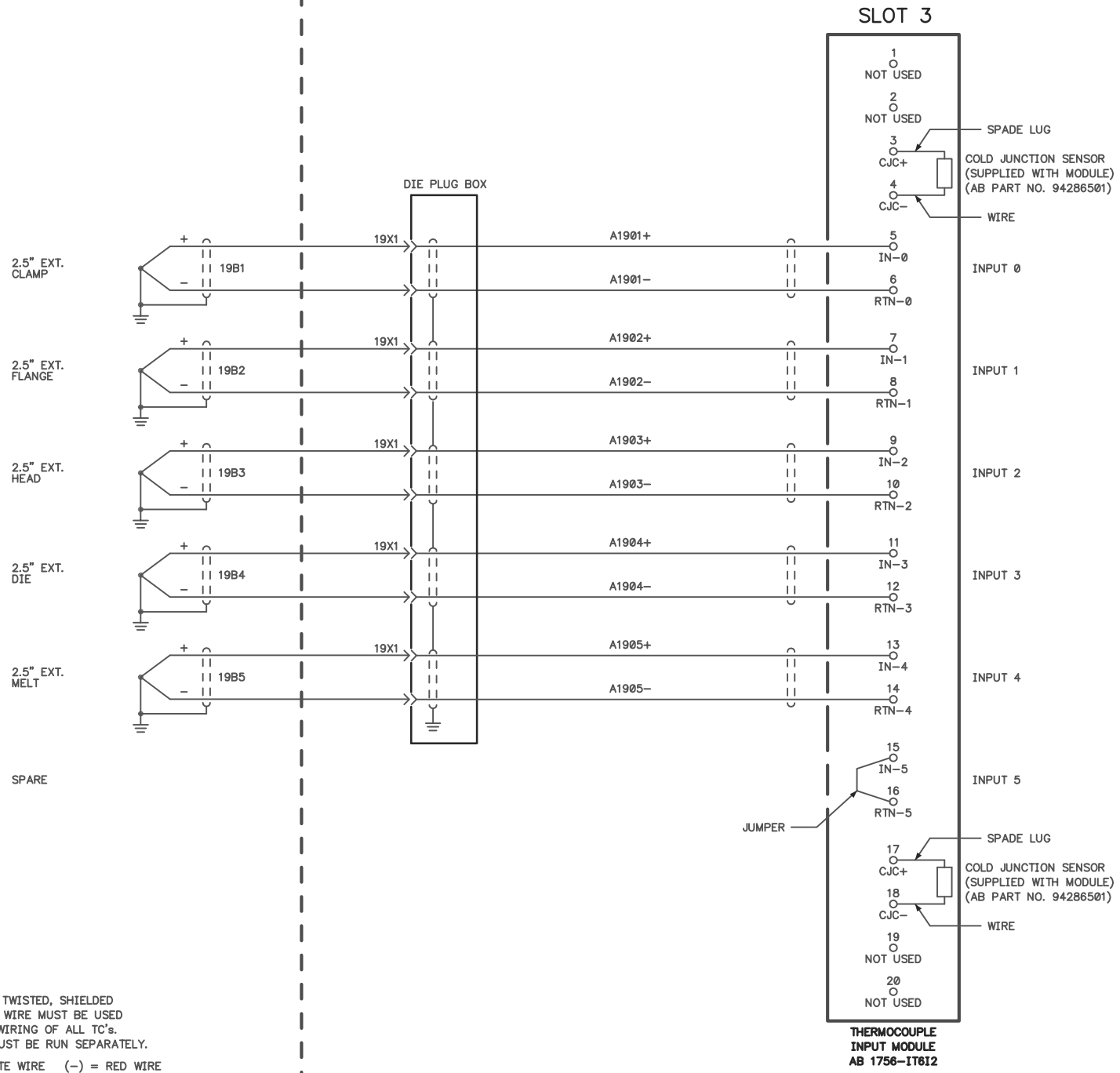

NOTES:

1) STRANDED, TWISTED, SHIELDED TYPE J(IC) WIRE MUST BE USED FOR INTERWIRING OF ALL TC's. TC WIRE MUST BE RUN SEPARATELY.

2) (+) = WHITE WIRE (−) = RED WIRE

Davis-Standard® CONTROLS
1 Extrusion Drive
Pawcatuck, CT 06379
Tel : (860) 599-1010
Fax : (860) 599-2952
www.Davis-Standard.com

DATE	09/27/05
ENG	DAG
CAD	81239A19
MSTR	

HONEYWELL GENESIS CABLE

WIRING DIAGRAM
EXTRUDER CONTROL
THERMOCOUPLE INPUT

D	
C	
B	
A	

SHT 19 OF 36
BOM BD803
DWG 81239A

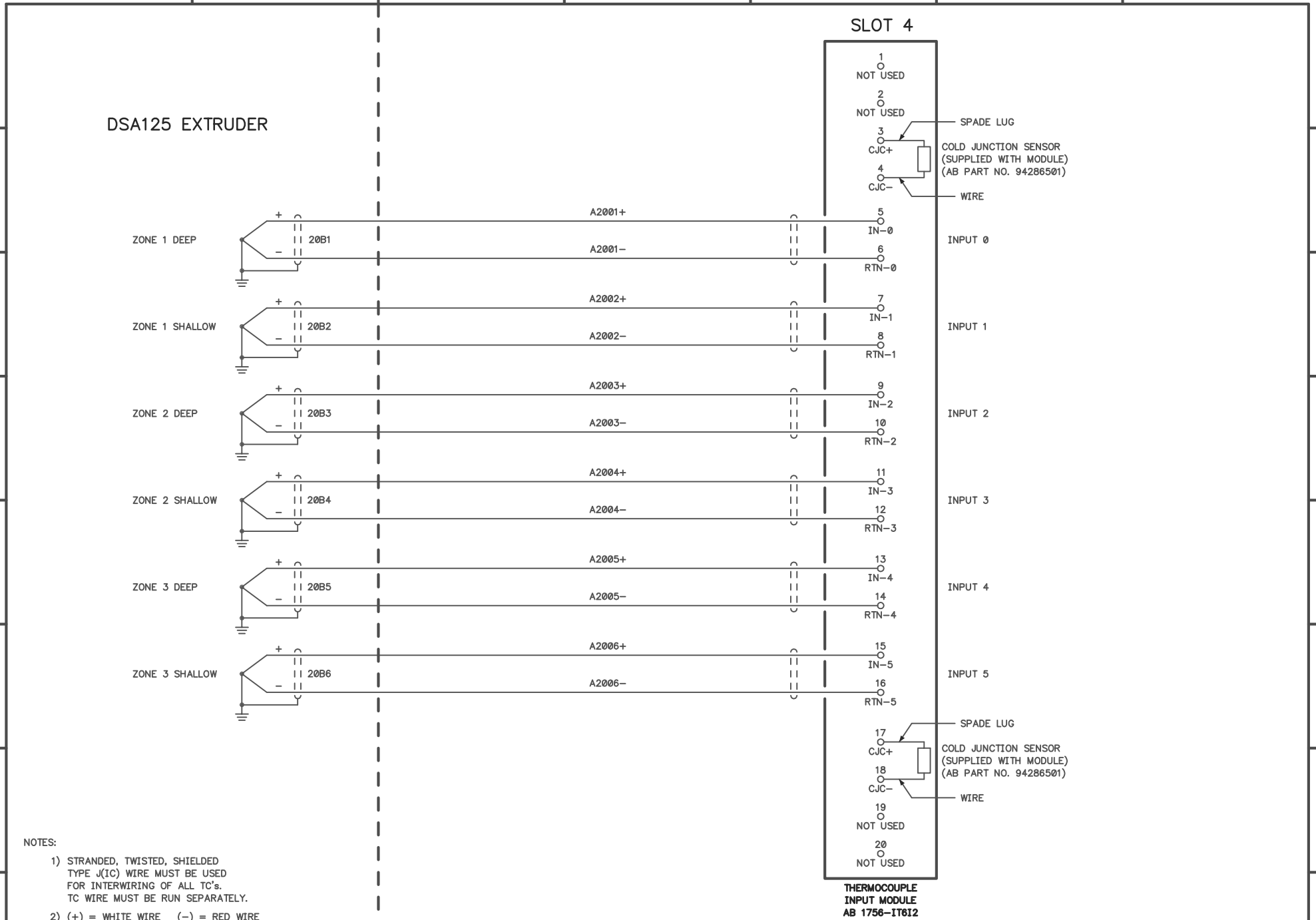

NOTES:

1) STRANDED, TWISTED, SHIELDED TYPE J(IC) WIRE MUST BE USED FOR INTERWIRING OF ALL TC's. TC WIRE MUST BE RUN SEPARATELY.

2) (+) = WHITE WIRE (−) = RED WIRE

Davis-Standard® CONTROLS

1 Extrusion Drive
Pawcatuck, CT 06379
Tel : (860) 599-1010
Fax : (860) 599-2952
www.Davis-Standard.com

DATE	09/27/05
ENG	DAG
CAD	81239A20
MSTR	

HONEYWELL GENESIS CABLE

WIRING DIAGRAM
EXTRUDER CONTROL
THERMOCOUPLE INPUT

D	
C	
B	
A	

SHT 20 OF 36
BOM BD803
DWG 81239A

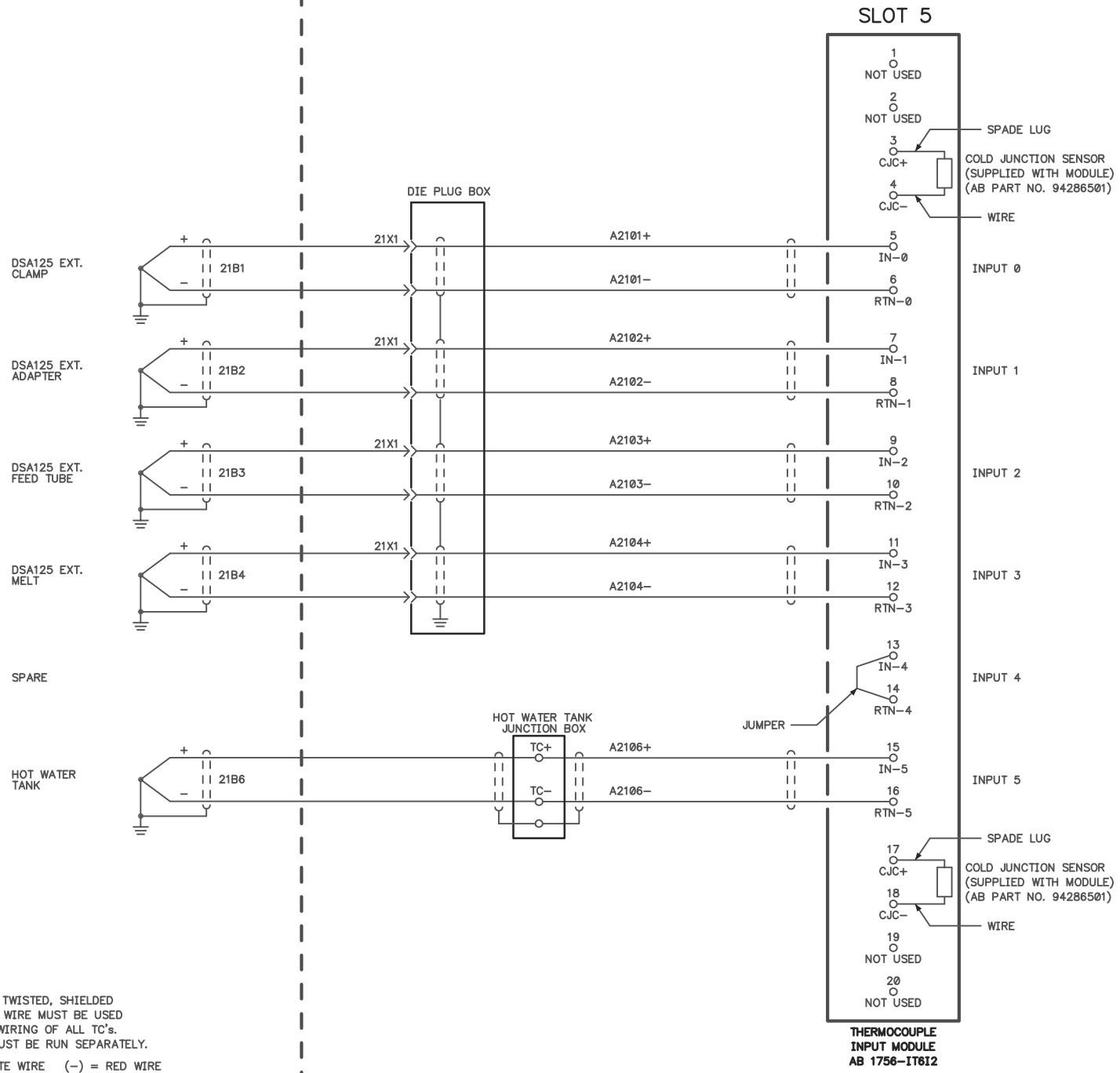

NOTES:

1) STRANDED, TWISTED, SHIELDED TYPE J(IC) WIRE MUST BE USED FOR INTERWIRING OF ALL TC's. TC WIRE MUST BE RUN SEPARATELY.

2) (+) = WHITE WIRE (−) = RED WIRE

Davis-Standard® CONTROLS
1 Extrusion Drive
Pawcatuck, CT 06379
Tel : (860) 599-1010
Fax : (860) 599-2952
www.Davis-Standard.com

DATE	09/27/05
ENG	DAG
CAD	81239A21
MSTR	

HONEYWELL GENESIS CABLE

WIRING DIAGRAM
EXTRUDER CONTROL
THERMOCOUPLE INPUT

D	
C	
B	
A	

SHT 21 OF 36
BOM BD803
DWG 81239A

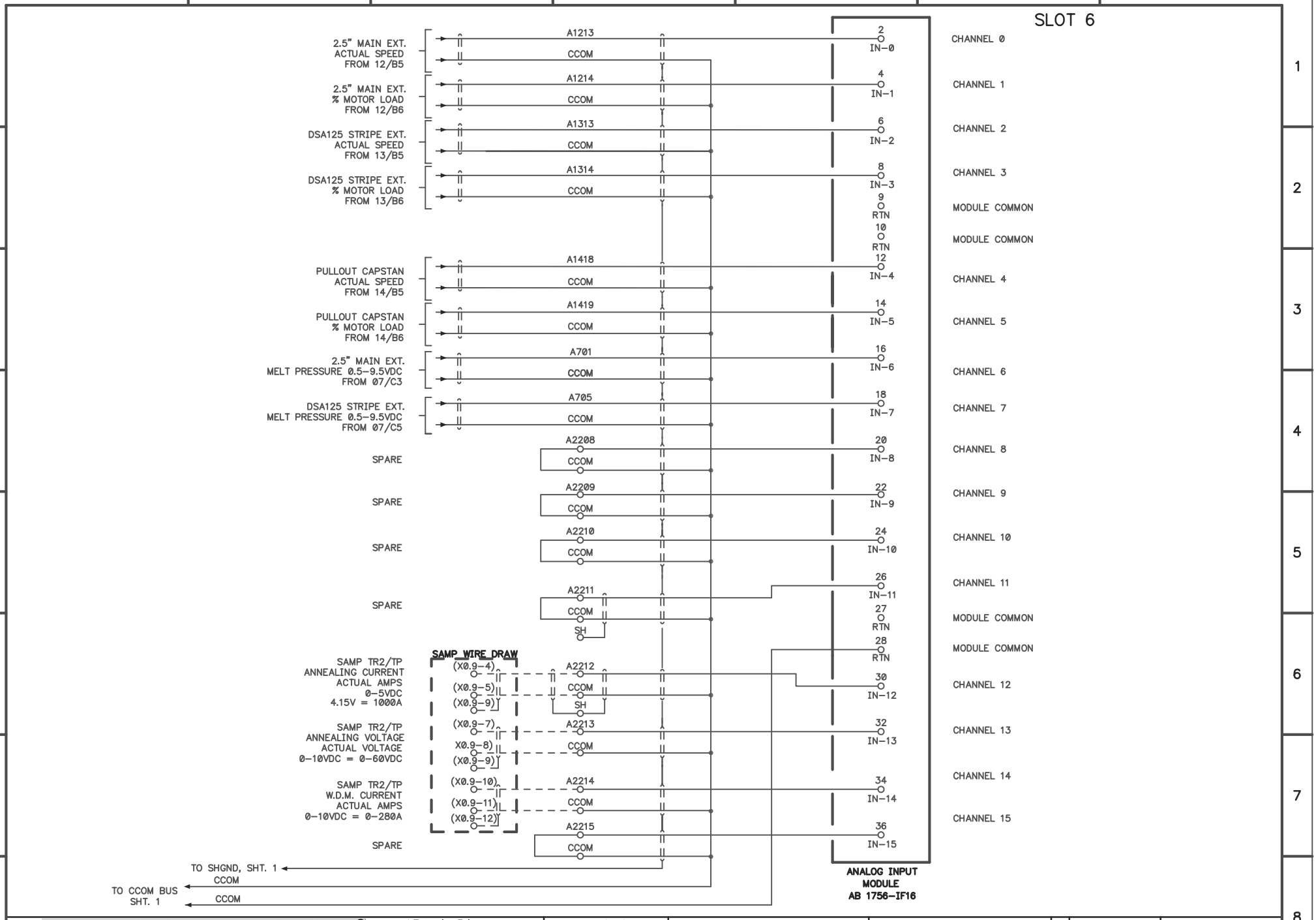

Davis-Standard® CONTROLS

1 Extrusion Drive
Pawcatuck, CT 06379
Tel : (860) 599-1010
Fax : (860) 599-2952
www.Davis-Standard.com

DATE	08/05/06
ENG	DAG
CAD	81239A22
MSTR	

HONEYWELL GENESIS CABLE

WIRING DIAGRAM
EXTRUDER CONTROL
ANALOG INPUT MODULE

SHT	22 OF 36
BOM	BD803
DWG	81239A

11/5/2009 8:06:19 AM, FINAL - Approved for Installation

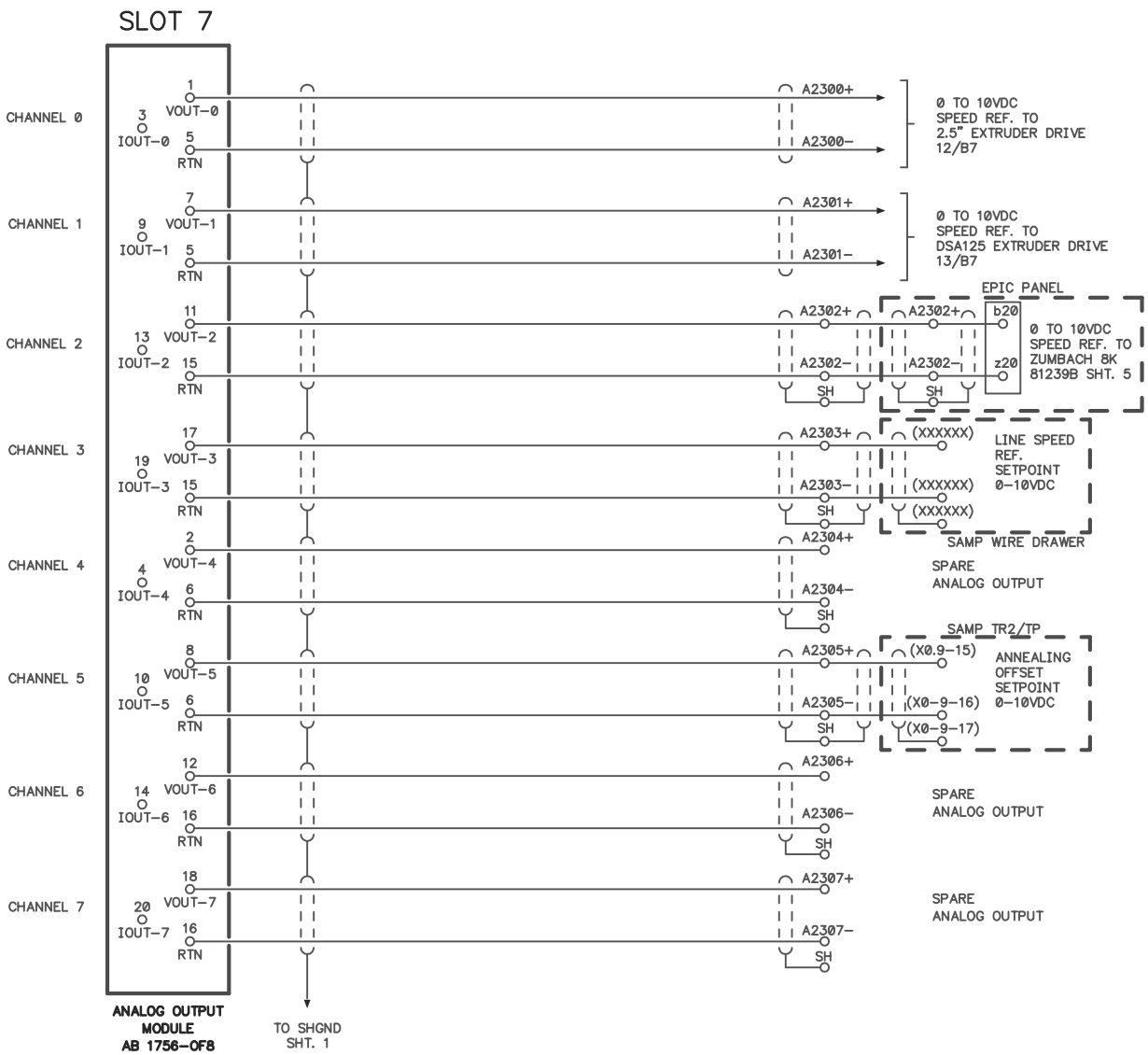

NOTE: DO NOT GND SHIELDED CABLES
AT EQUIPMENT END.

Davis-Standard® CONTROLS
1 Extrusion Drive
Pawcatuck, CT 06379
Tel : (860) 599-1010
Fax : (860) 599-2952
www.Davis-Standard.com

DATE	08/05/06
ENG	DAG
CAD	81239A23
MSTR	

HONEYWELL GENESIS CABLE

WIRING DIAGRAM
EXTRUDER CONTROL
ANALOG OUTPUT MODULE

D	
C	
B	
A	

SHT 23 OF 36
BOM BD803
DWG 81239A

BLANK SHEET

Davis-Standard® CONTROLS
1 Extrusion Drive
Pawcatuck, CT 06379
Tel : (860) 599-1010
Fax : (860) 599-2952
www.Davis-Standard.com

DATE	09/27/05
ENG	DAG
CAD	81239A24
MSTR	

HONEYWELL GENESIS CABLE

WIRING DIAGRAM
EXTRUDER CONTROL
BLANK SHEET

D	
C	
B	
A	

SHT	24 OF 36
BOM	BD803
DWG	81239A

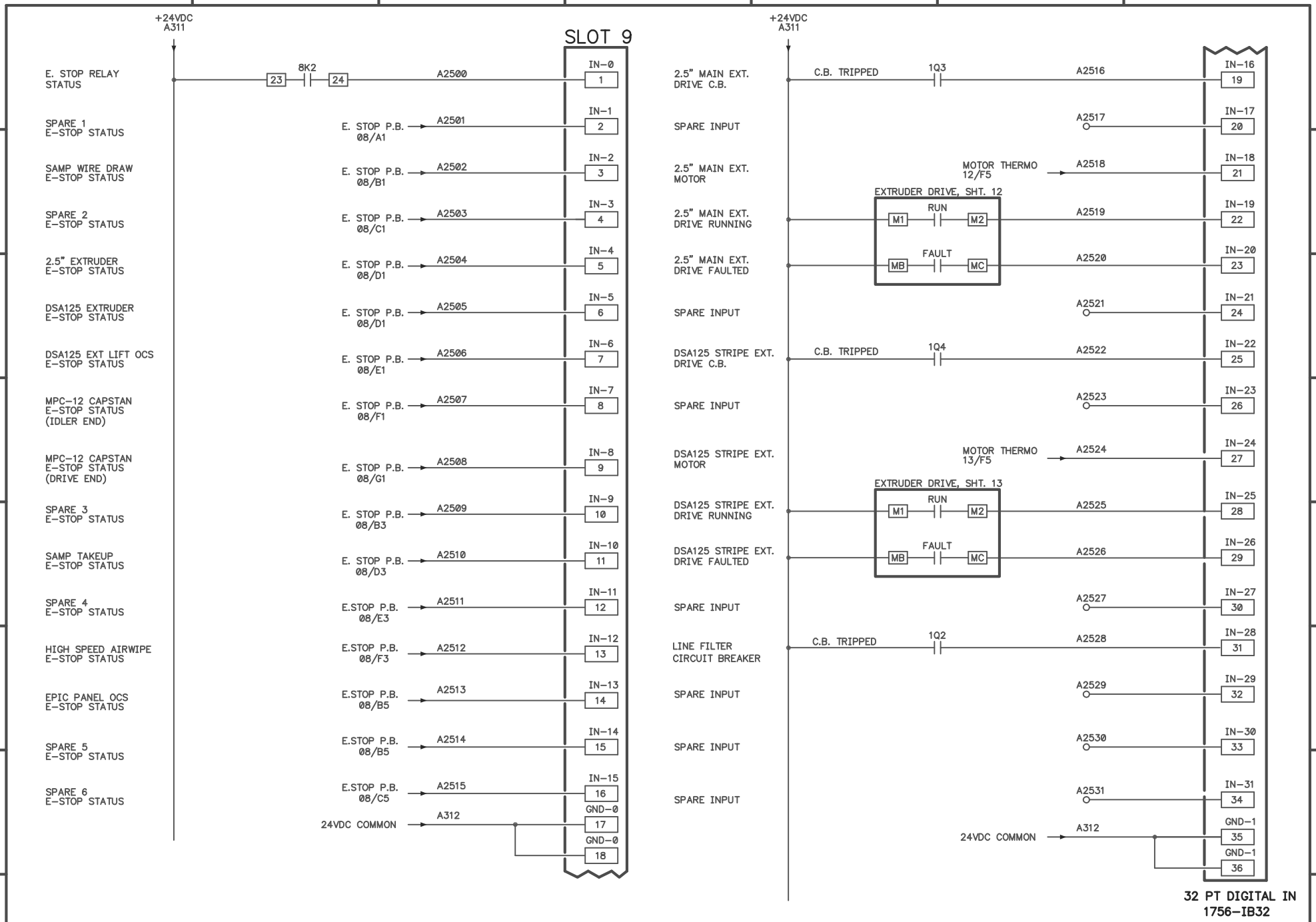

Davis-Standard® CONTROLS

1 Extrusion Drive
Pawcatuck, CT 06379
Tel : (860) 599-1010
Fax : (860) 599-2952
www.Davis-Standard.com

DATE	09/27/05
ENG	DAG
CAD	81239A25
MSTR	

HONEYWELL GENESIS CABLE

WIRING DIAGRAM
EXTRUDER CONTROL
32 POINT DC INPUT

D	
C	
B	
A	

SHT 25 OF 36
BOM BD803
DWG 81239A

11/5/2009 8:06:36 AM, FINAL - Approved for Installation

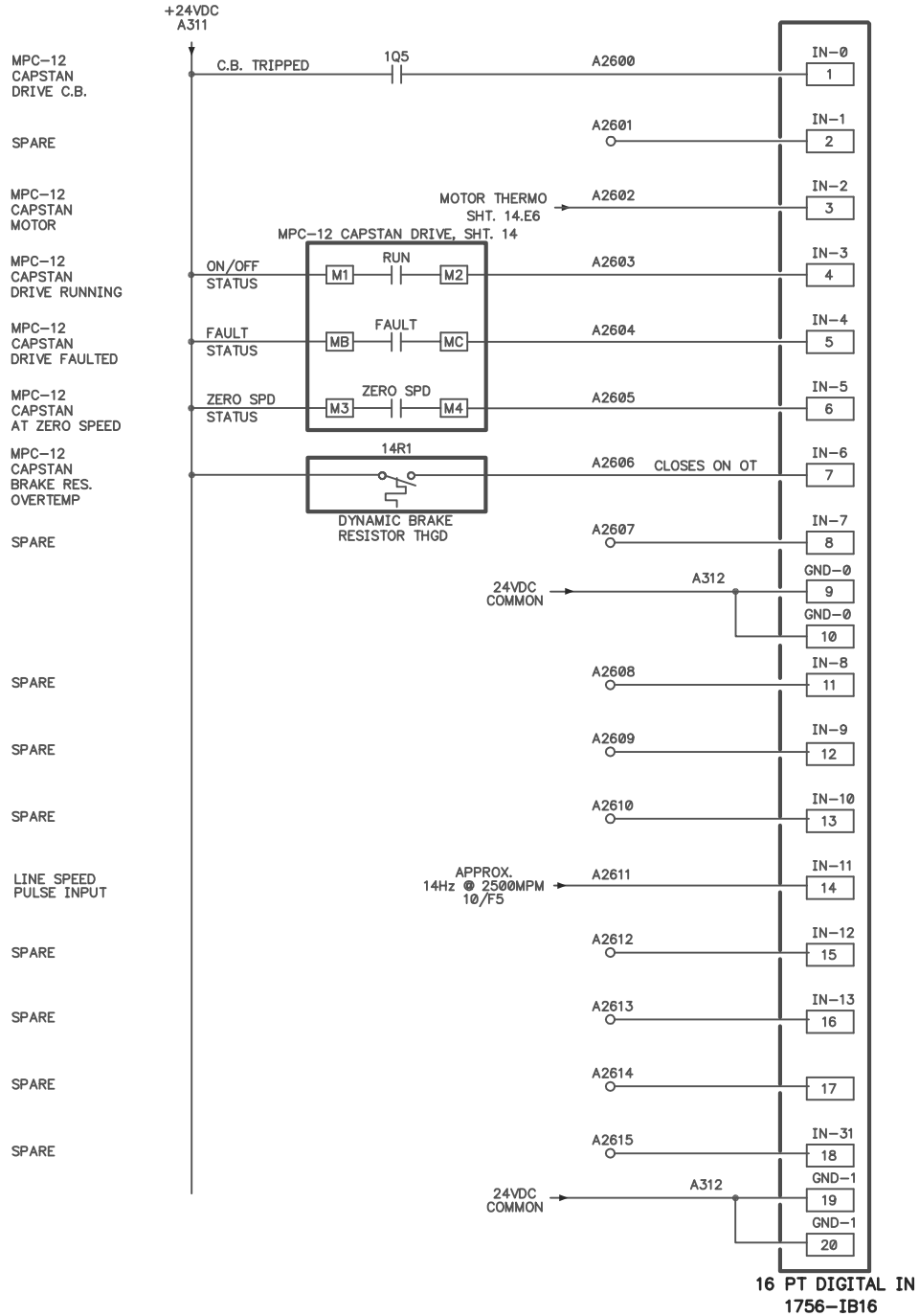

Davis-Standard® CONTROLS

1 Extrusion Drive
Pawcatuck, CT 06379
Tel : (860) 599-1010
Fax : (860) 599-2952
www.Davis-Standard.com

DATE	10/05/05
ENG	DAG
CAD	81239A26
MSTR	

HONEYWELL GENESIS CABLE

WIRING DIAGRAM
EXTRUDER CONTROL
16 POINT DC INPUT

D	
C	
B	
A	

SHT 26 OF 36
BOM BD803
DWG 81239A

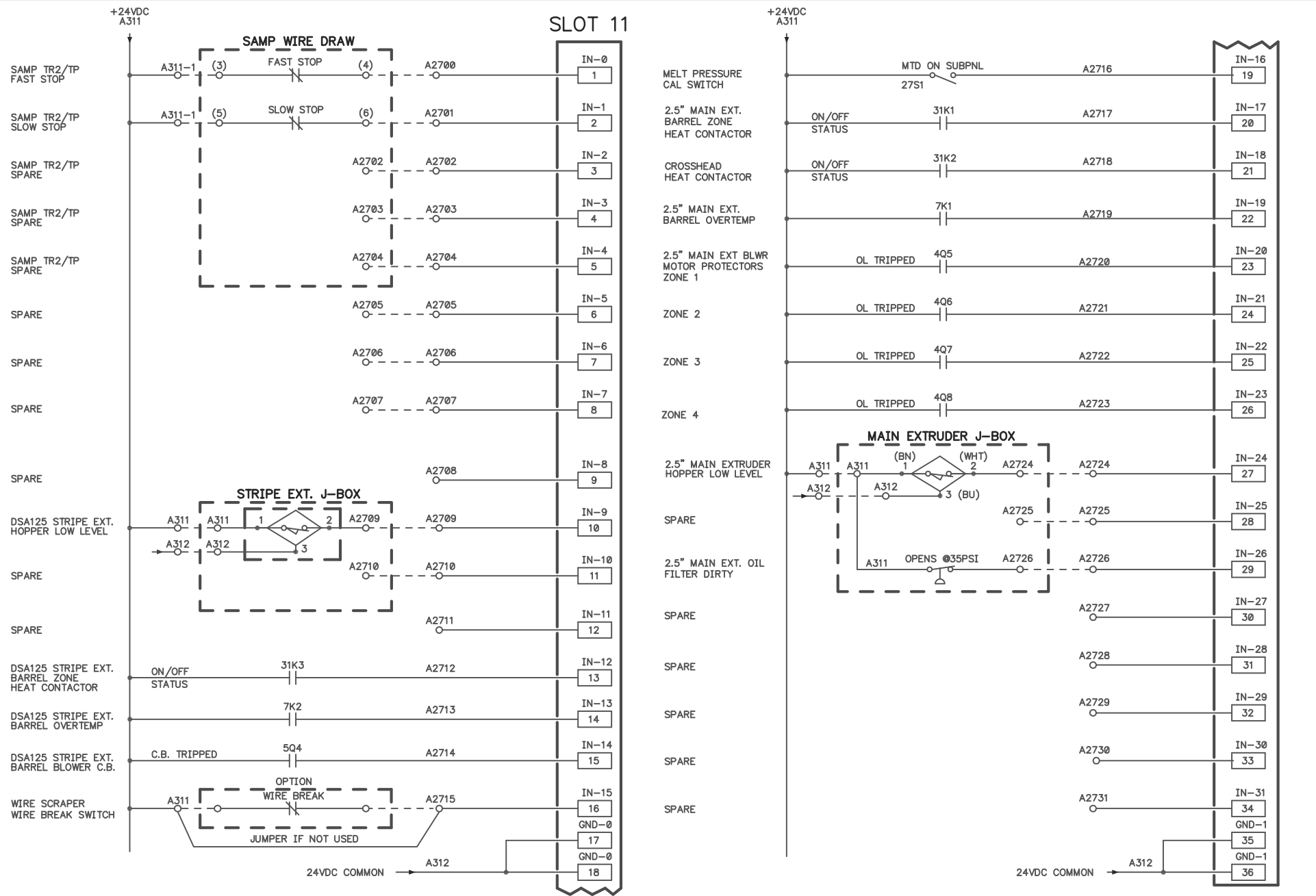

Davis-Standard CONTROLS
1 Extrusion Drive
Pawcatuck, CT 06379
Tel : (860) 599-1010
Fax : (860) 599-2952
www.Davis-Standard.com

DATE	11/21/05
ENG	DAG
CAD	81239A27
MSTR	

HONEYWELL GENESIS CABLE

WIRING DIAGRAM
EXTRUDER CONTROL
32 POINT DC INPUT

SHT	27 OF 36
BOM	BD803
DWG	81239A

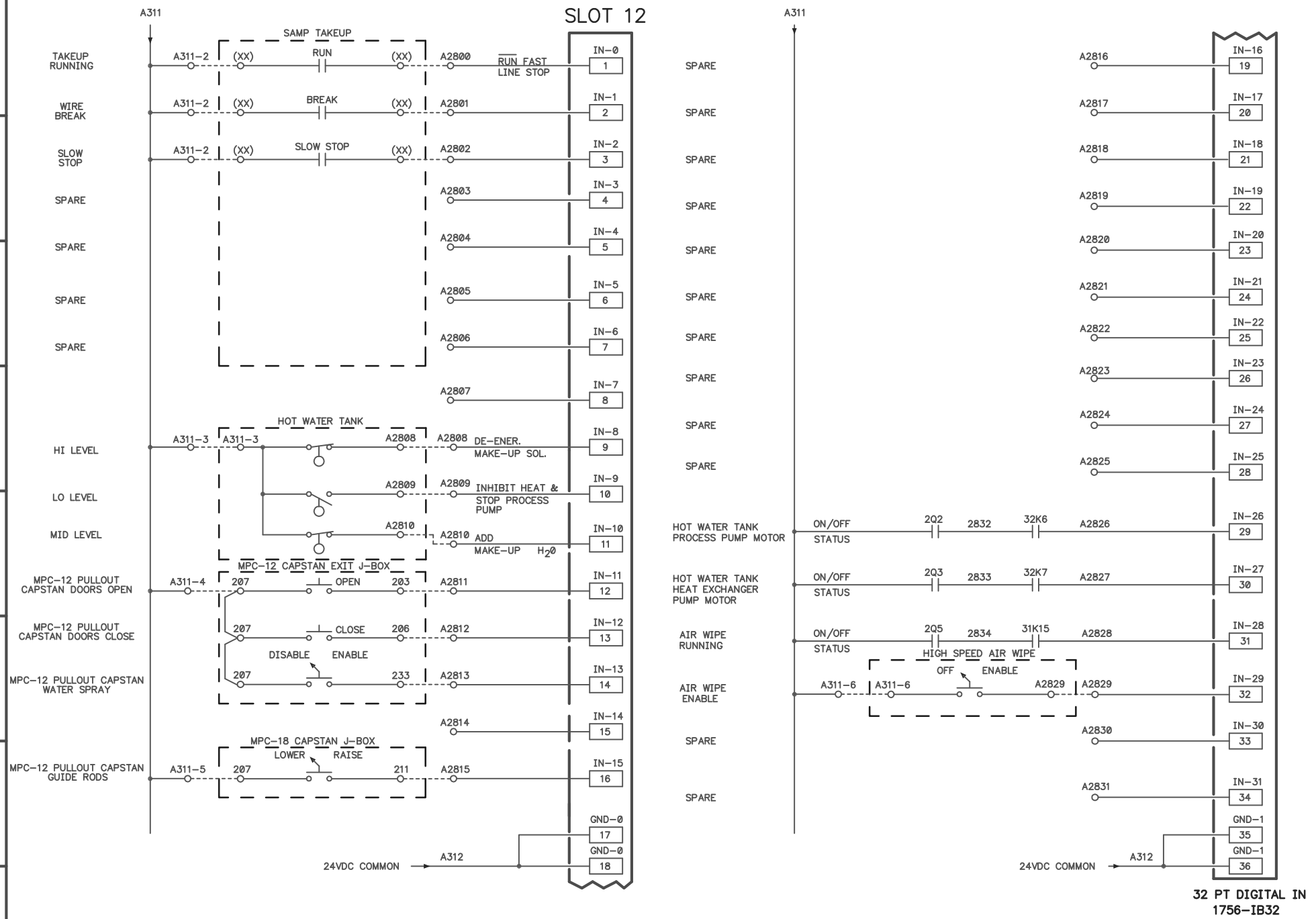

Davis-Standard® CONTROLS

1 Extrusion Drive
Pawcatuck, CT 06379
Tel : (860) 599-1010
Fax : (860) 599-2952
www.Davis-Standard.com

DATE	08/05/06
ENG	DAG
CAD	81239A28
MSTR	

HONEYWELL GENESIS CABLE

WIRING DIAGRAM
EXTRUDER CONTROL
32 POINT DC INPUT

D	
C	
B	
A	

SHT 28 OF 36
BOM BD803
DWG 81239A

11/5/2009 8:06:54 AM, FINAL - Approved for Installation

RESERVED

Davis-Standard®
CONTROLS
1 Extrusion Drive
Pawcatuck, CT 06379
Tel : (860) 599-1010
Fax : (860) 599-2952
www.Davis-Standard.com

DATE	09/27/05
ENG	DAG
CAD	81239A29
MSTR	

HONEYWELL GENESIS CABLE

WIRING DIAGRAM
EXTRUDER CONTROL
BLANK SHEET

D	
C	
B	
A	

SHT 29 OF 36
BOM BD803
DWG 81239A

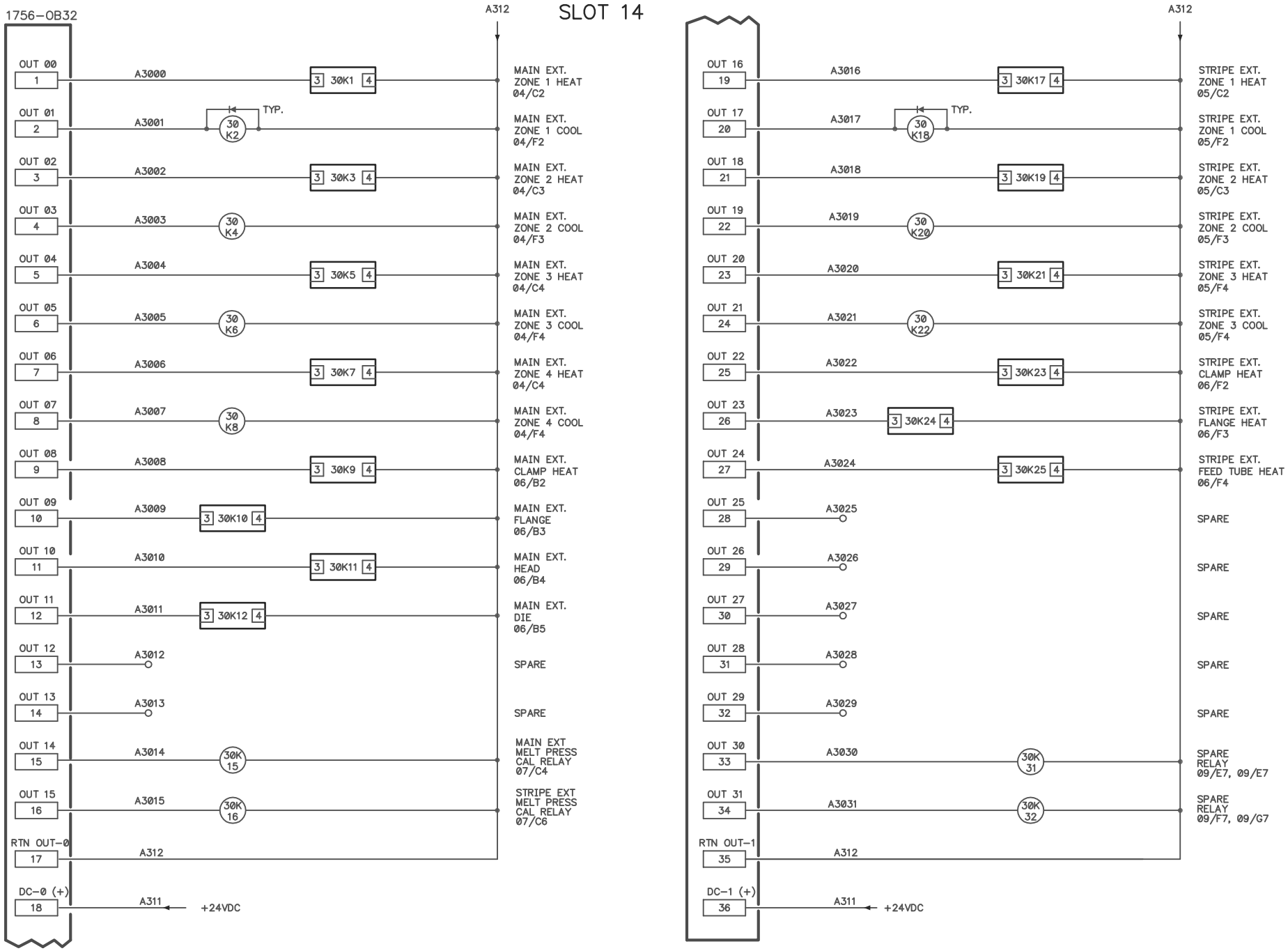

Davis-Standard® CONTROLS

1 Extrusion Drive
Pawcatuck, CT 06379
Tel : (860) 599-1010
Fax : (860) 599-2952
www.Davis-Standard.com

DATE	10/13/05
ENG	DAG
CAD	81239A30
MSTR	

HONEYWELL GENESIS CABLE

WIRING DIAGRAM
EXTRUDER CONTROL
32 POINT DC OUTPUT

D	
C	
B	
A	

SHT 30 OF 36
BOM BDB03
DWG 81239A

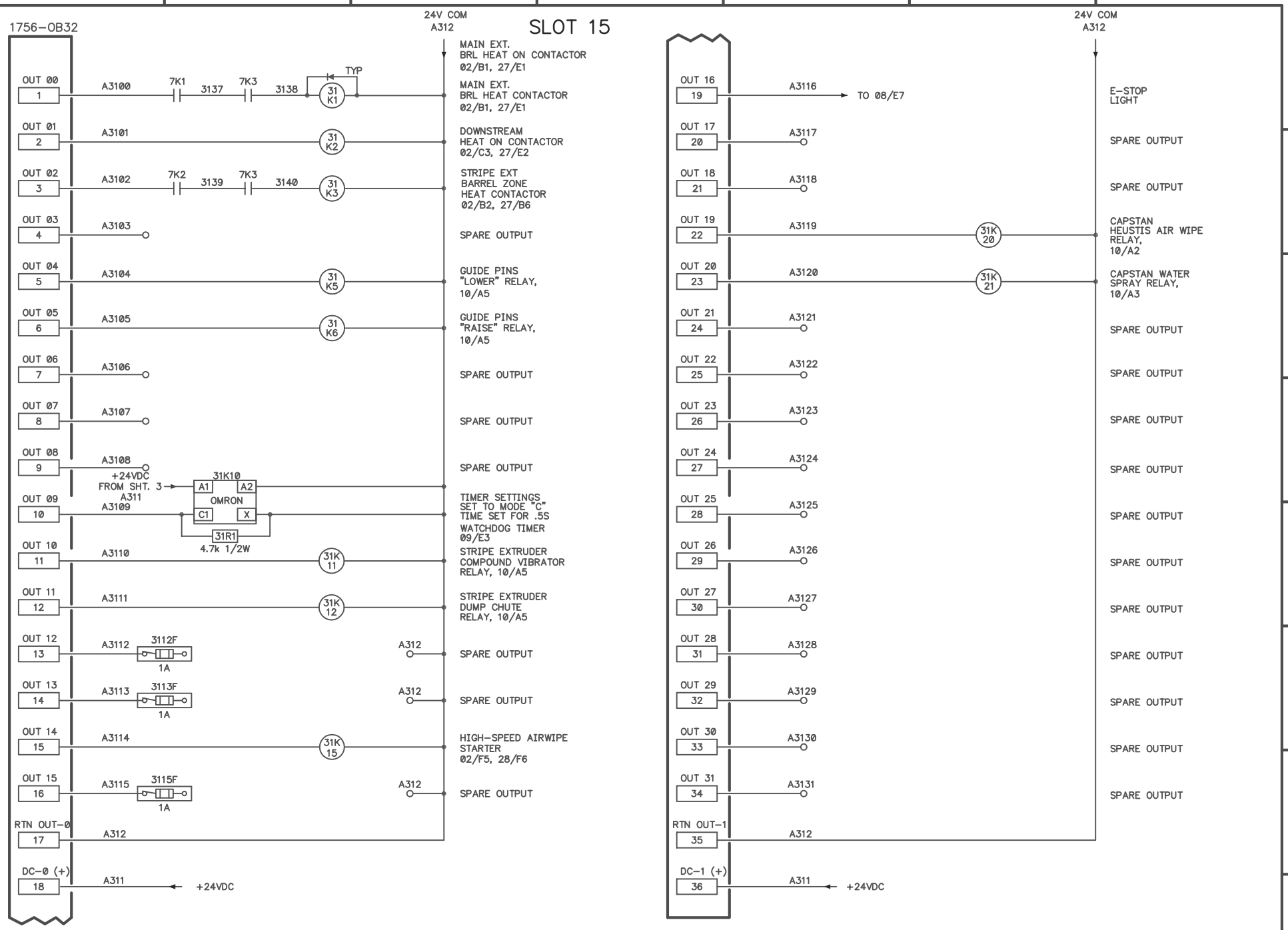

Davis-Standard® CONTROLS

1 Extrusion Drive
Pawcatuck, CT 06379
Tel : (860) 599-1010
Fax : (860) 599-2952
www.Davis-Standard.com

DATE	10/05/05
ENG	DAG
CAD	81239A31
MSTR	

HONEYWELL GENESIS CABLE

WIRING DIAGRAM
EXTRUDER CONTROL
32 POINT DC OUTPUT

D	
C	
B	
A	

SHT 31 OF 36
BOM BD803
DWG 81239A

11/5/2009 8:07:11 AM, FINAL - Approved for Installation

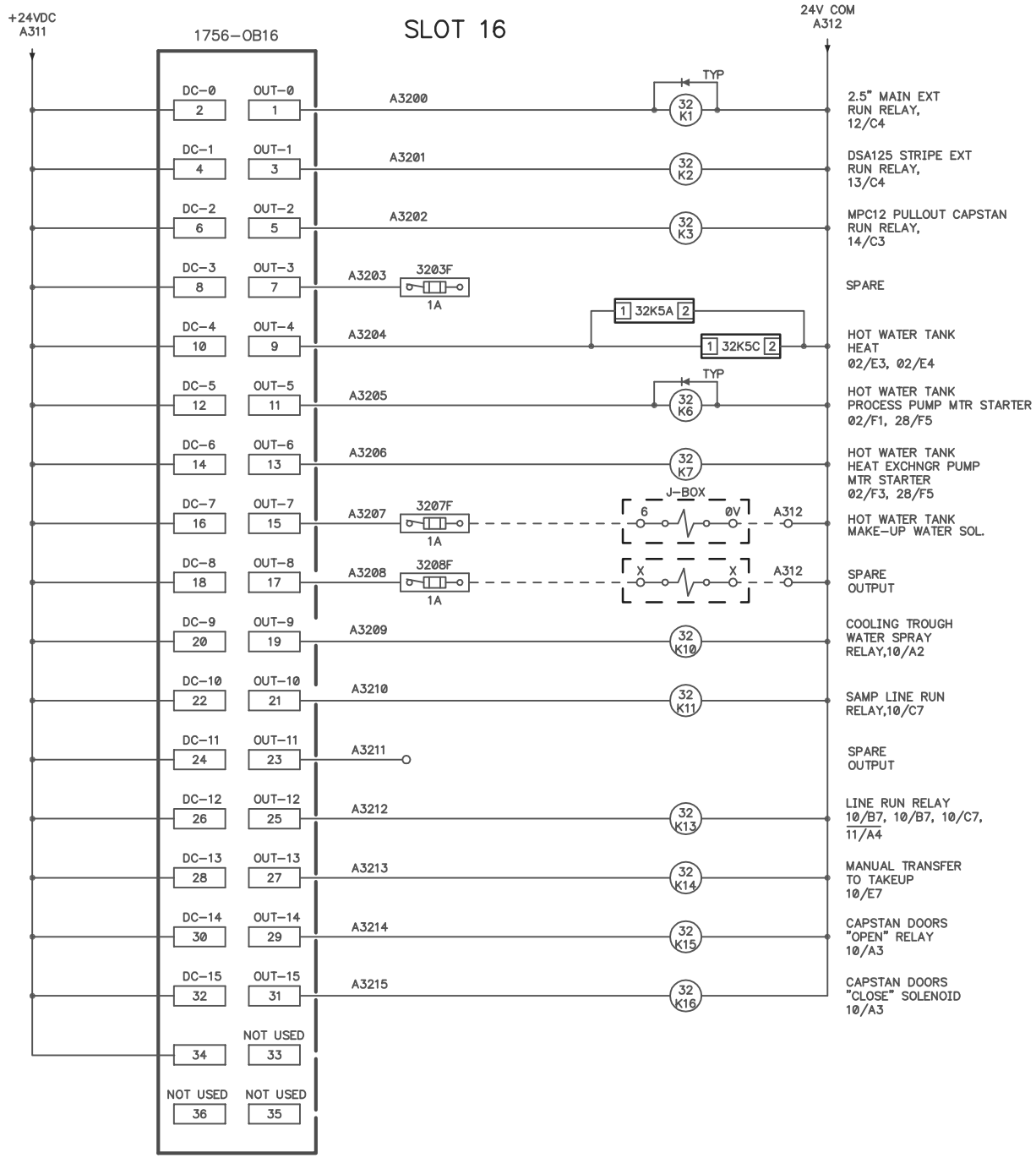

Davis-Standard® CONTROLS

1 Extrusion Drive
Pawcatuck, CT 06379
Tel : (860) 599-1010
Fax : (860) 599-2952
www.Davis-Standard.com

DATE	08/05/06
ENG	DAG
CAD	81239A32
MSTR	

HONEYWELL GENESIS CABLE

WIRING DIAGRAM
EXTRUDER CONTROL
16 POINT DC OUTPUT

D	
C	
B	
A	

SHT 32 OF 36
BOM BD803
DWG 81239A

RESERVED

Davis-Standard® CONTROLS
1 Extrusion Drive
Pawcatuck, CT 06379
Tel : (860) 599-1010
Fax : (860) 599-2952
www.Davis-Standard.com

DATE	09/27/05
ENG	DAG
CAD	81239A33
MSTR	

HONEYWELL GENESIS CABLE

WIRING DIAGRAM
EXTRUDER CONTROL
BLANK SHEET

D	
C	
B	
A	

SHT	33 OF 36
BOM	BD803
DWG	81239A

RESERVED

Davis-Standard CONTROLS
1 Extrusion Drive
Pawcatuck, CT 06379
Tel : (860) 599-1010
Fax : (860) 599-2952
www.Davis-Standard.com

DATE	09/27/05
ENG	DAG
CAD	81239A34
MSTR	

HONEYWELL GENESIS CABLE

WIRING DIAGRAM
EXTRUDER CONTROL
BLANK SHEET

D	
C	
B	
A	

SHT	34 OF 36
BOM	BD803
DWG	81239A

RESERVED

Davis-Standard® CONTROLS
1 Extrusion Drive
Pawcatuck, CT 06379
Tel : (860) 599-1010
Fax : (860) 599-2952
www.Davis-Standard.com

DATE	09/27/05
ENG	DAG
CAD	81239A35
MSTR	

HONEYWELL GENESIS CABLE

WIRING DIAGRAM
EXTRUDER CONTROL
BLANK SHEET

D	
C	
B	
A	

SHT	35 OF 36
BOM	BD803
DWG	81239A

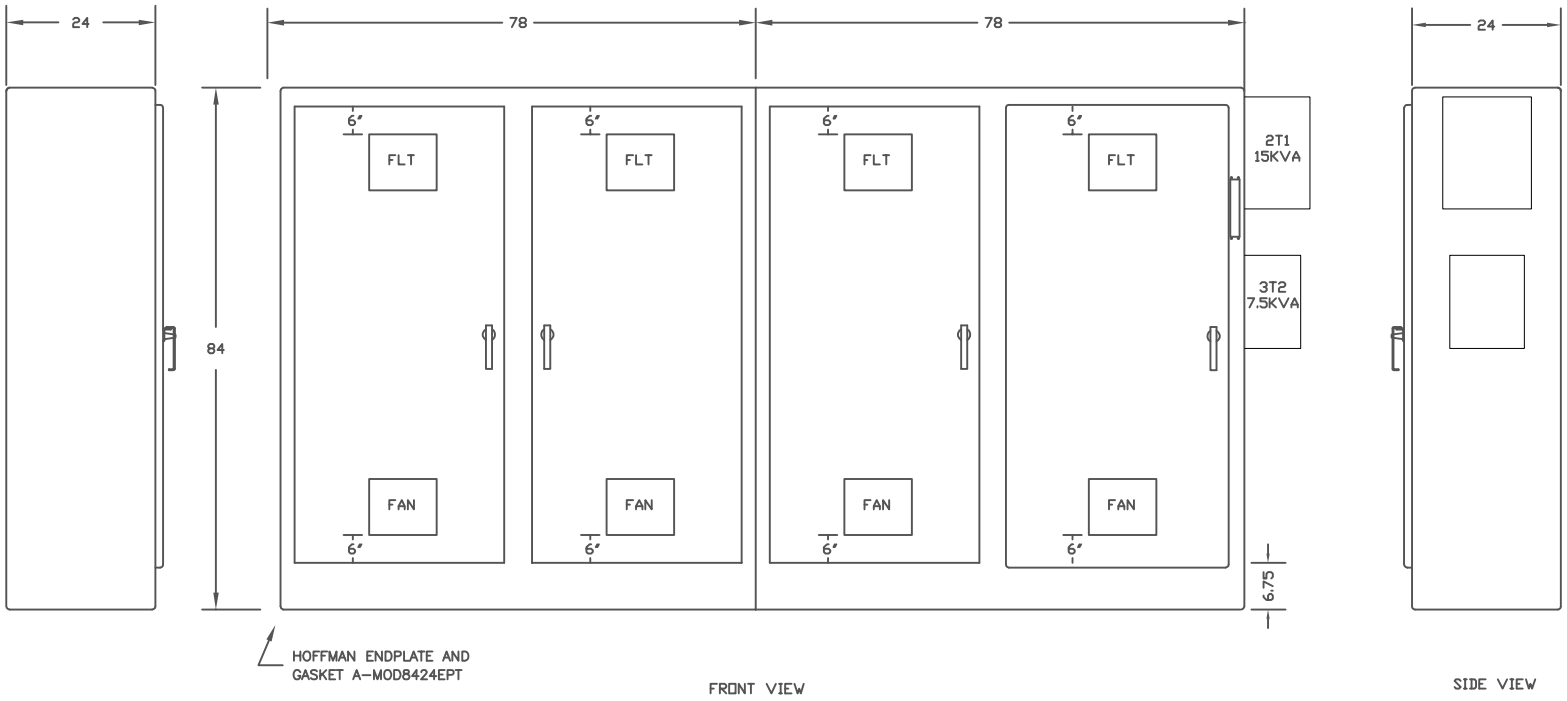

Davis-Standard® CONTROLS
1 Extrusion Drive
Pawcatuck, CT 06379
Tel : (860) 599-1010
Fax : (860) 599-2952
www.Davis-Standard.com

DATE	09/27/05
ENG	DAG
CAD	81239A36
MSTR	

HONEYWELL GENESIS CABLE

WIRING DIAGRAM
EXTRUDER CONTROL
ENCLOSURE BLOCK DIAGRAM

D	
C	
B	
A	

SHT 36 OF 36
BOM BD803
DWG 81239A

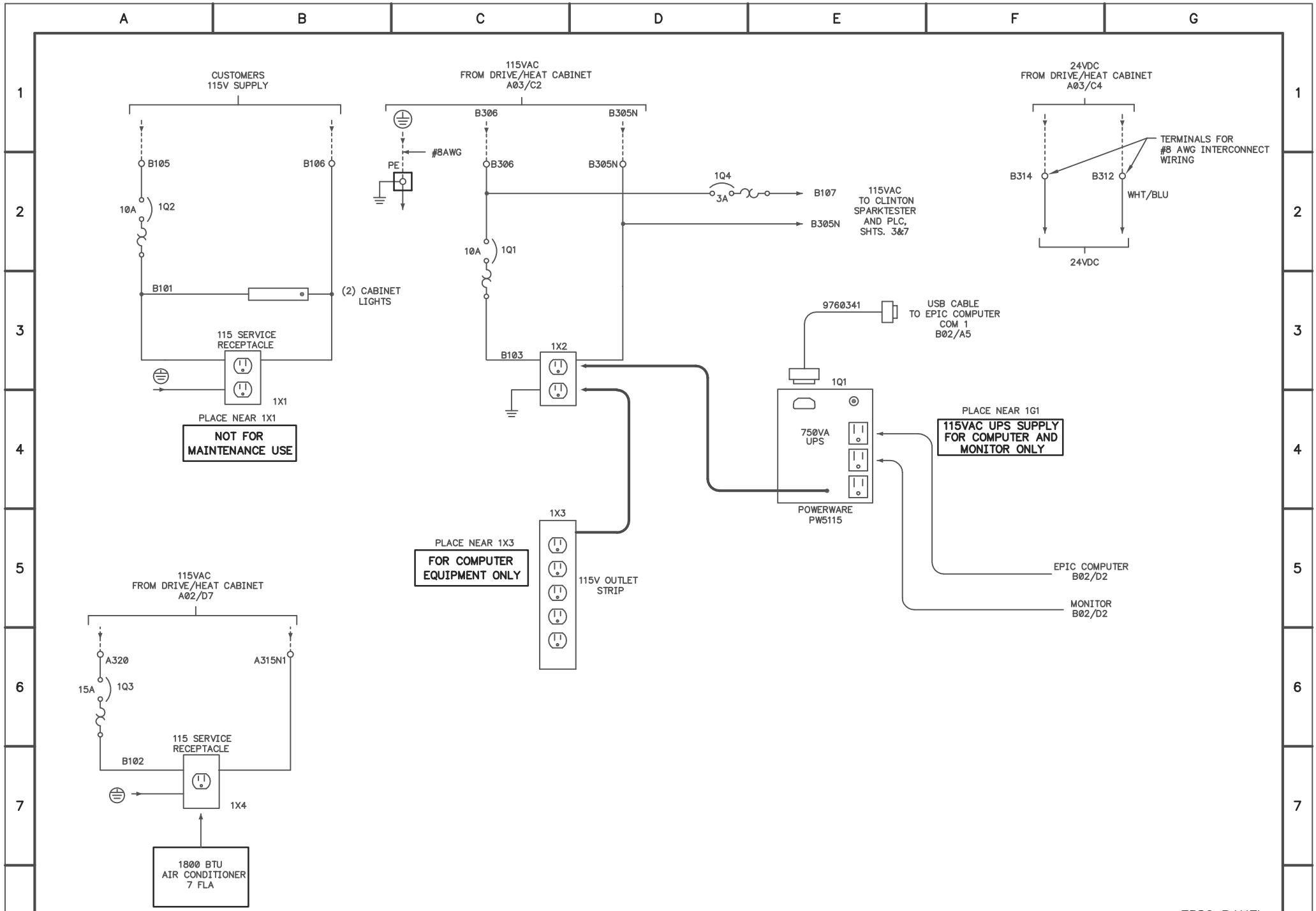

EPIC PANEL

Davis-Standard® CONTROLS

1 Extrusion Drive
Pawcatuck, CT 06379
Tel : (860) 599-1010
Fax : (860) 599-2952
www.Davis-Standard.com

DATE	10/11/05
ENG	DAG
CAD	81239B01
MSTR	

HONEYWELL GENESIS CABLE

WIRING DIAGRAM
POWER DISTRIBUTION
EPIC PANEL

D	
C	
B	
A	

SHT 1 OF 16
BOM BD802
DWG 81239B

11/5/2009 8:07:47 AM, FINAL - Approved for Installation

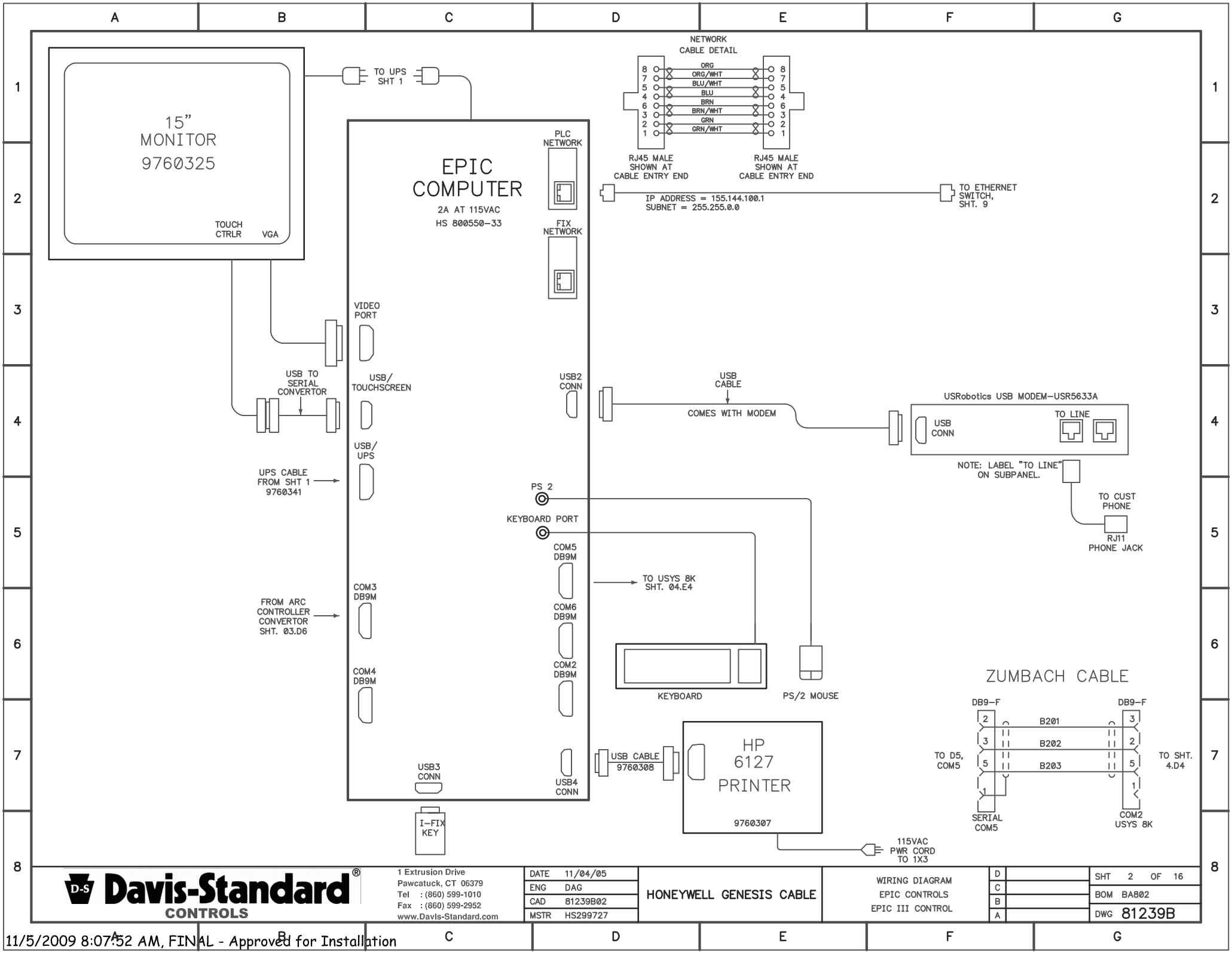

Davis-Standard® CONTROLS

1 Extrusion Drive
Pawcatuck, CT 06379
Tel : (860) 599-1010
Fax : (860) 599-2952
www.Davis-Standard.com

DATE	11/04/05
ENG	DAG
CAD	81239B02
MSTR	HS299727

HONEYWELL GENESIS CABLE

WIRING DIAGRAM
EPIC CONTROLS
EPIC III CONTROL

D	
C	
B	
A	

SHT 2 OF 16
BOM BA802
DWG 81239B

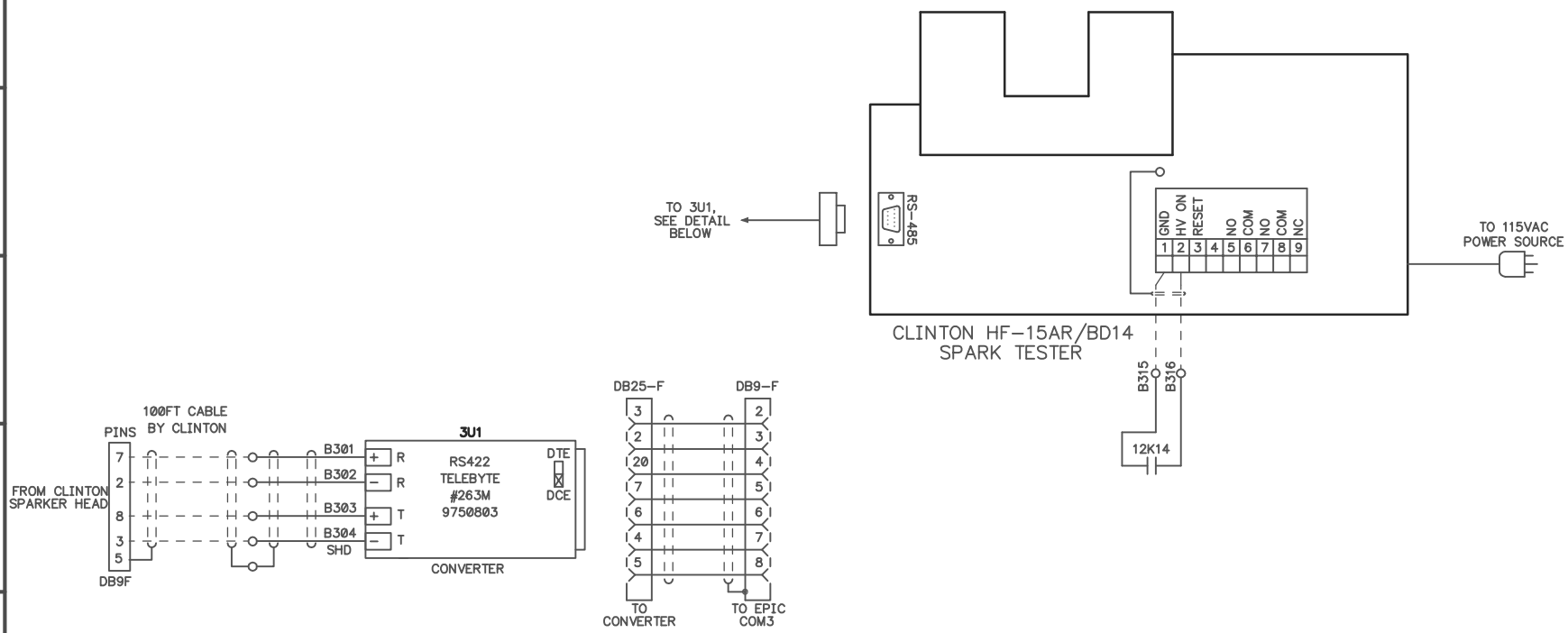

EPIC PANEL

Davis-Standard® CONTROLS

1 Extrusion Drive
Pawcatuck, CT 06379
Tel : (860) 599-1010
Fax : (860) 599-2952
www.Davis-Standard.com

DATE	12/06/05
ENG	DAG
CAD	81239B03
MSTR	

HONEYWELL GENESIS CABLE

WIRING DIAGRAM
CLINTON SPARK TESTER

D	
C	
B	
A	

SHT 3 OF 16
BOM BD802
DWG 81239B

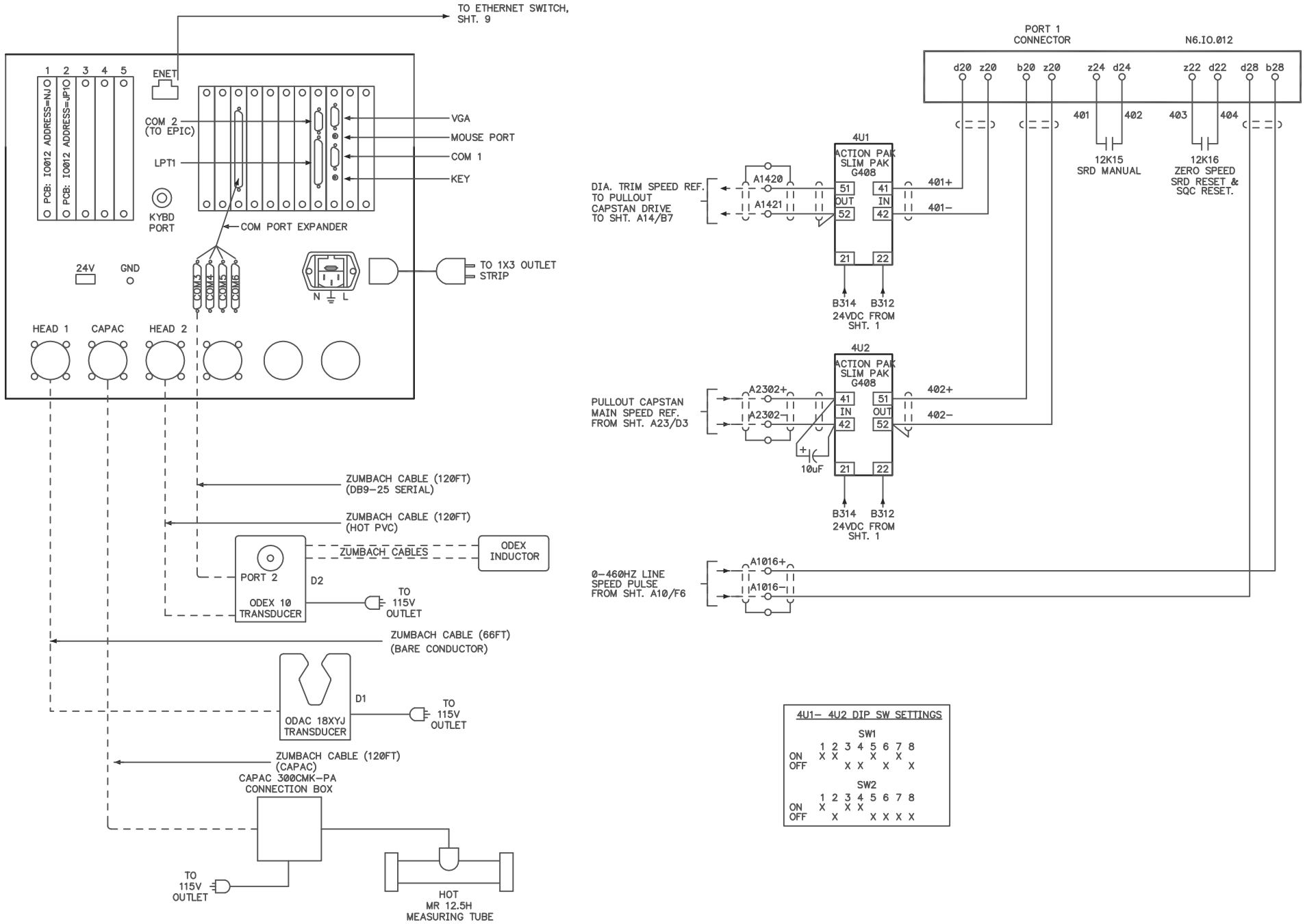

Davis-Standard® CONTROLS

1 Extrusion Drive
Pawcatuck, CT 06379
Tel : (860) 599-1010
Fax : (860) 599-2952
www.Davis-Standard.com

DATE	08/05/06
ENG	DAG
CAD	81239B04
MSTR	

HONEYWELL GENESIS CABLE

WIRING DIAGRAM

ZUMBACH 8000

D	
C	
B	
A	

SHT 4 OF 16
BOM BD802
DWG 81239B

11/5/2009 8:08:04 AM, FINAL - Approved for Installation

BLANK SHEET

Davis-Standard® CONTROLS
1 Extrusion Drive
Pawcatuck, CT 06379
Tel : (860) 599-1010
Fax : (860) 599-2952
www.Davis-Standard.com

DATE	10/08/05
ENG	DAG
CAD	81239B05
MSTR	

HONEYWELL GENESIS CABLE

WIRING DIAGRAM

BLANK SHEET

D	
C	
B	
A	

SHT 5 OF 16
BOM BDB02
DWG 81239B

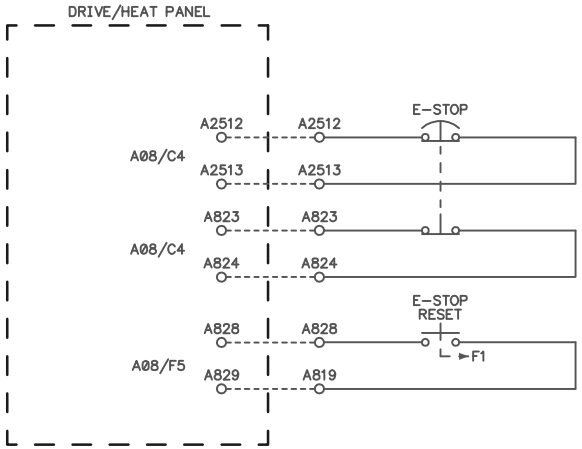

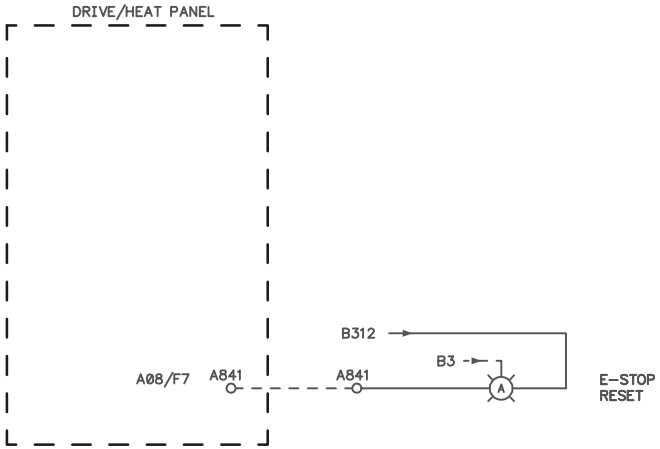

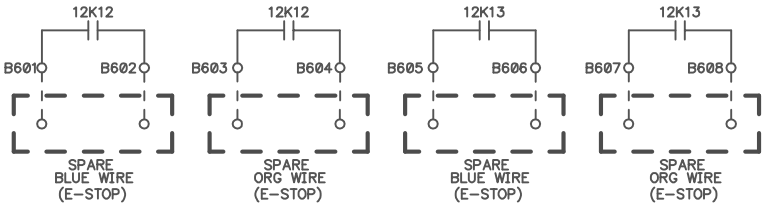

EPIC PANEL

Davis-Standard® CONTROLS
1 Extrusion Drive
Pawcatuck, CT 06379
Tel : (860) 599-1010
Fax : (860) 599-2952
www.Davis-Standard.com

DATE	10/11/05
ENG	DAG
CAD	81239B06
MSTR	

HONEYWELL GENESIS CABLE

WIRING DIAGRAM
OPERATOR DEVICES

D	
C	
B	
A	

SHT	6 OF 16
BOM	BD802
DWG	81239B

MAIN RACK

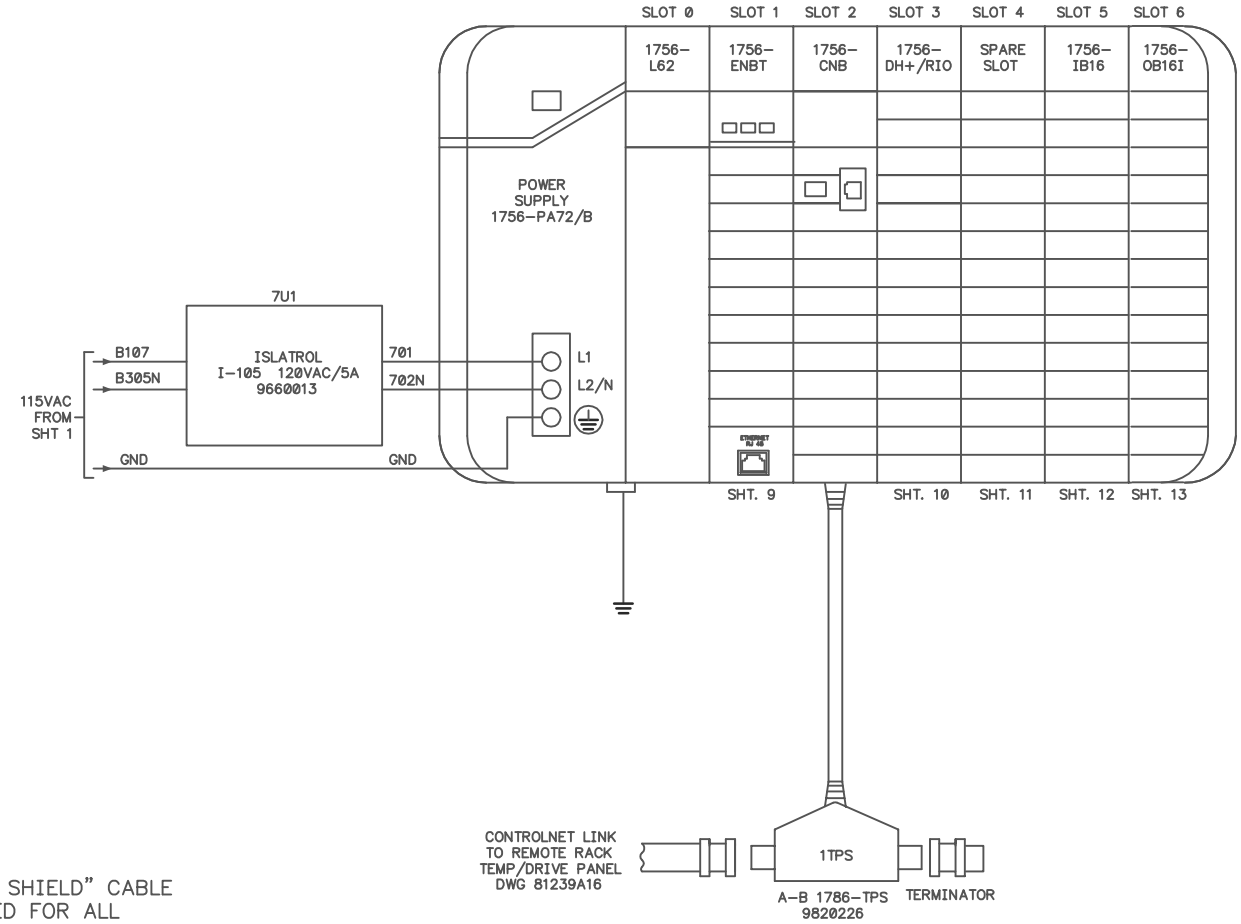

NOTE: RG-6 "QUAD SHIELD" CABLE MUST BE USED FOR ALL CONTROLNET INTERCONNECT WIRING.

REFERENCE PDF FILES ON THE DOCUMENTATION CD FOR FURTHER INSTALLATION DETAILS.
FILES: 1786621rn1.PDF & 1786-in009b-en-p.PDF

Davis-Standard® CONTROLS
1 Extrusion Drive
Pawcatuck, CT 06379
Tel : (860) 599-1010
Fax : (860) 599-2952
www.Davis-Standard.com

DATE	10/06/05
ENG	DAG
CAD	81239B07
MSTR	

HONEYWELL GENESIS CABLE

WIRING DIAGRAM
EPIC CONSOLE
MAIN PLC RACK LAYOUT

D	
C	
B	
A	

SHT	7 OF 16
BOM	BD802
DWG	81239B

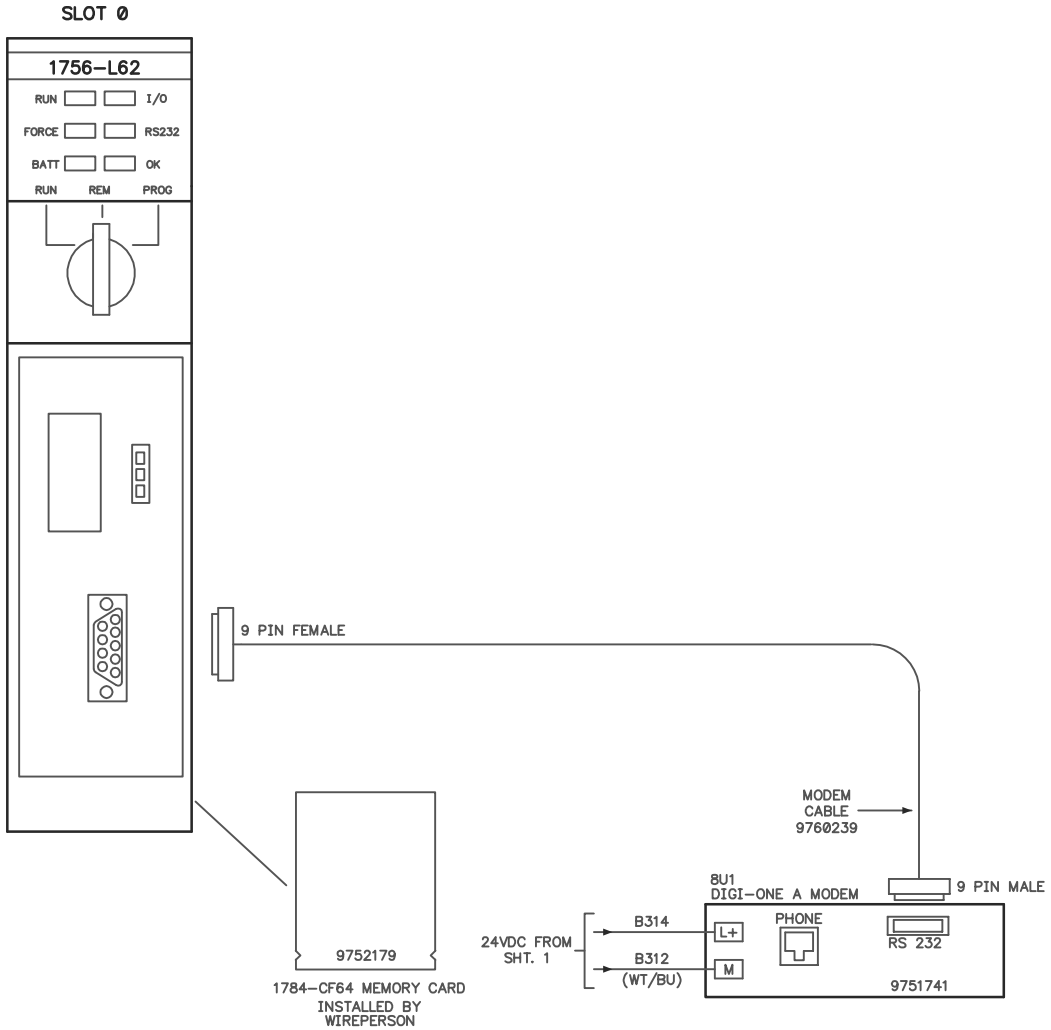

Davis-Standard® CONTROLS

1 Extrusion Drive
Pawcatuck, CT 06379
Tel : (860) 599-1010
Fax : (860) 599-2952
www.Davis-Standard.com

DATE	10/27/05
ENG	DAG
CAD	81239B08
MSTR	

HONEYWELL GENESIS CABLE

WIRING DIAGRAM
GP140 EXTRUDER CONTROL
PLC CPU MODULE

D	
C	
B	
A	

SHT 8 OF 16
BOM BD802
DWG 81239B

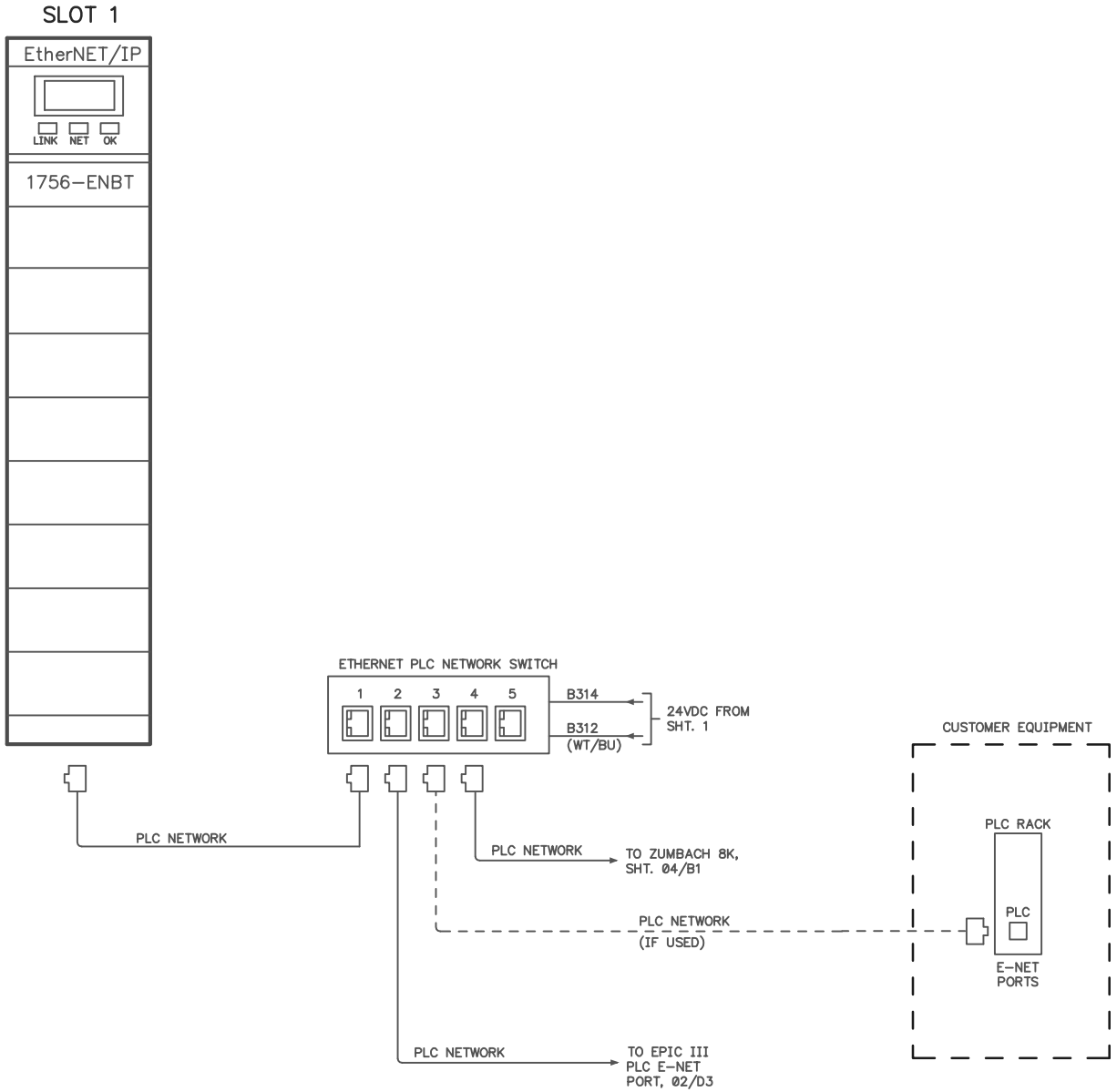

EPIC PANEL

Davis-Standard® CONTROLS

1 Extrusion Drive
Pawcatuck, CT 06379
Tel : (860) 599-1010
Fax : (860) 599-2952
www.Davis-Standard.com

DATE	10/11/05
ENG	DAG
CAD	81239B09
MSTR	

HONEYWELL GENESIS CABLE

WIRING DIAGRAM
ETHERNET MODULE

D	
C	
B	
A	

SHT 9 OF 16
BOM BD802
DWG 81239B

FUTURE (IF USED)

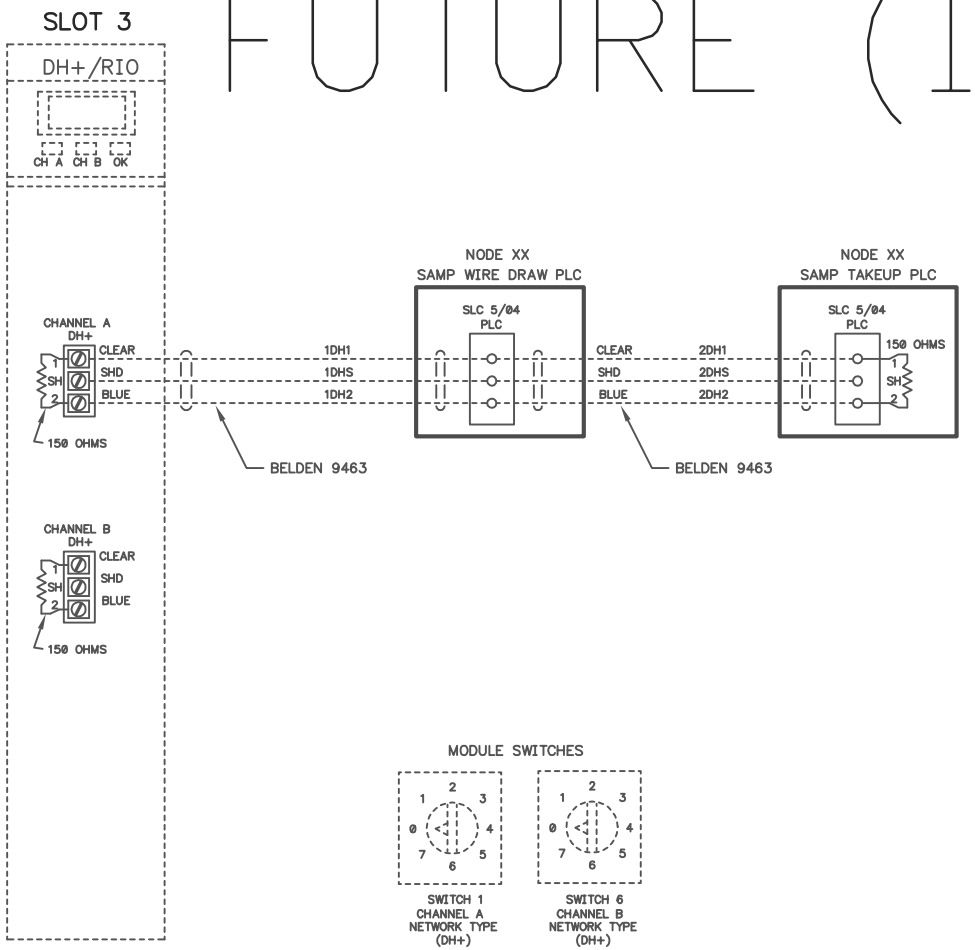

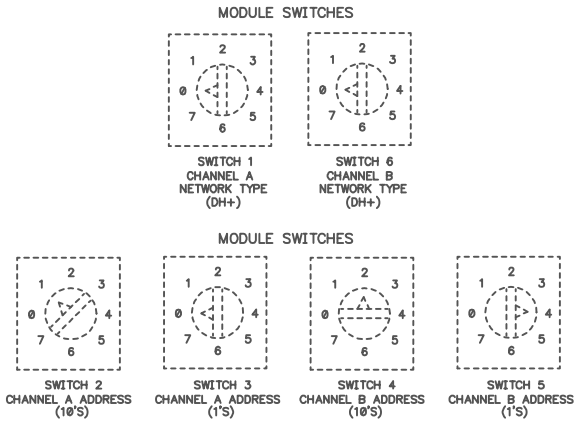

EPIC PANEL

Davis-Standard® CONTROLS
1 Extrusion Drive
Pawcatuck, CT 06379
Tel : (860) 599-1010
Fax : (860) 599-2952
www.Davis-Standard.com

DATE	10/06/05
ENG	DAG
CAD	81239B10
MSTR	

HONEYWELL GENESIS CABLE

WIRING DIAGRAM
DHRIO MODULE 1

D	
C	
B	
A	

SHT	10 OF 16
BOM	BD802
DWG	81239B

BLANK SHEET

Davis-Standard® CONTROLS
1 Extrusion Drive
Pawcatuck, CT 06379
Tel : (860) 599-1010
Fax : (860) 599-2952
www.Davis-Standard.com

DATE	10/06/05
ENG	DAG
CAD	81239B11
MSTR	

HONEYWELL GENESIS CABLE

WIRING DIAGRAM
EPIC CONSOLE
BLANK SHEET

D	
C	
B	
A	

SHT 11 OF 16
BOM BD802
DWG 81239B

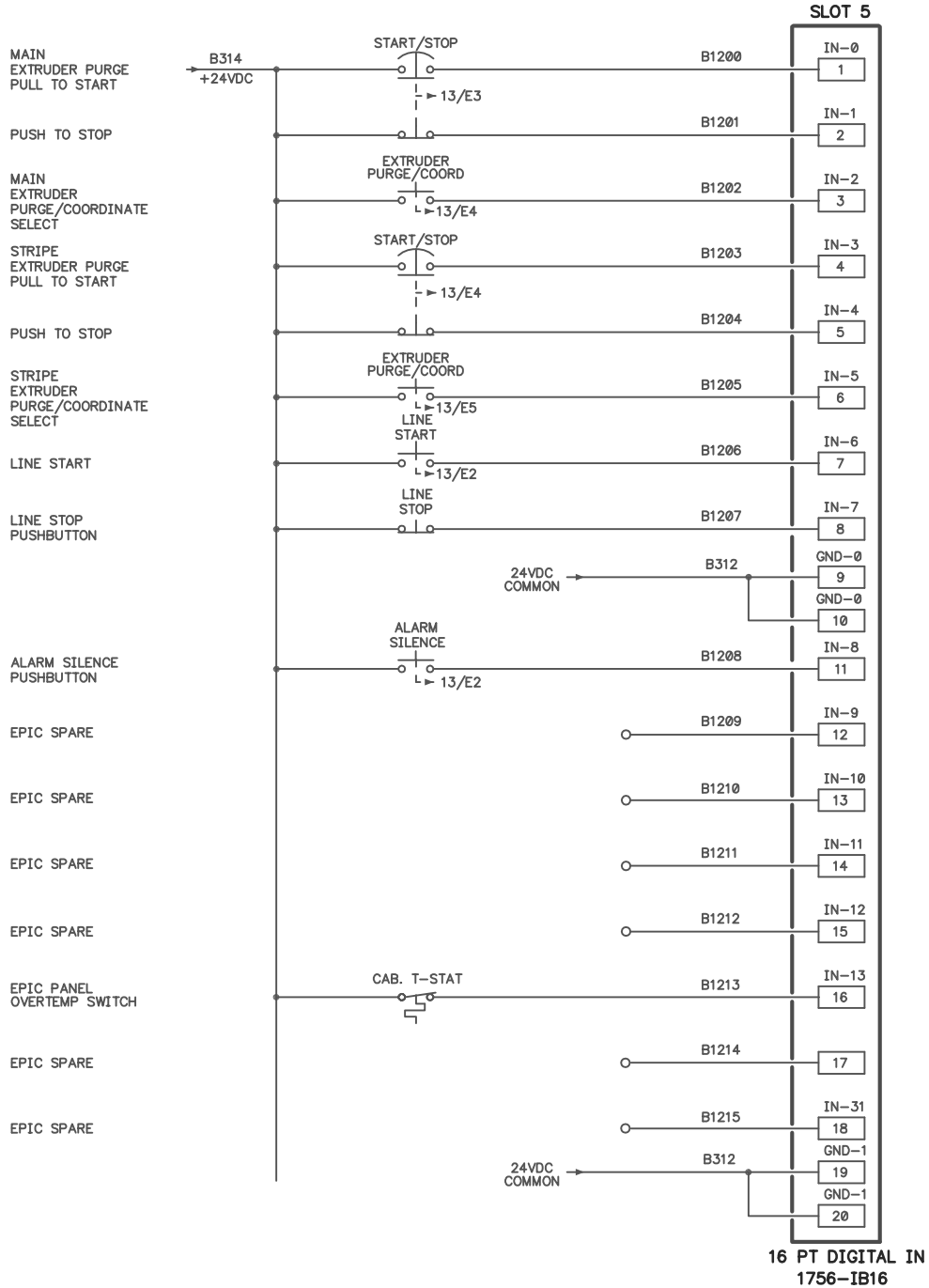

Davis-Standard® CONTROLS

1 Extrusion Drive
Pawcatuck, CT 06379
Tel : (860) 599-1010
Fax : (860) 599-2952
www.Davis-Standard.com

DATE	10/11/05
ENG	DAG
CAD	81239B12
MSTR	

HONEYWELL GENESIS CABLE

WIRING DIAGRAM
EPIC CONSOLE
16 POINT DC INPUT

D	
C	
B	
A	

SHT 12 OF 16
BOM BD802
DWG 81239B

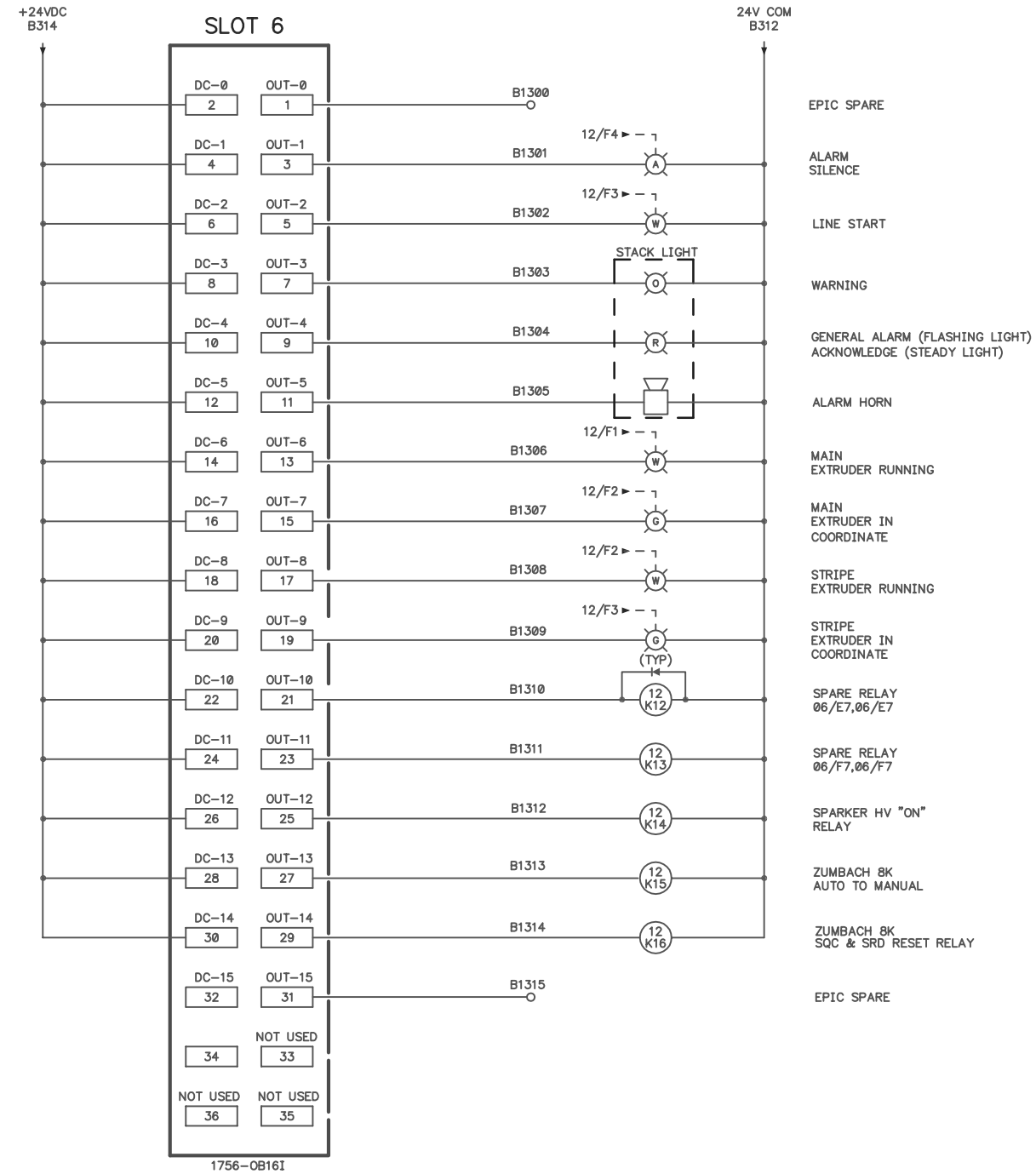

Davis-Standard® CONTROLS

1 Extrusion Drive
Pawcatuck, CT 06379
Tel : (860) 599-1010
Fax : (860) 599-2952
www.Davis-Standard.com

DATE	08/05/06
ENG	DAG
CAD	81239B13
MSTR	

HONEYWELL GENESIS CABLE

WIRING DIAGRAM
EPIC CONSOLE
16 POINT DC OUTPUT

D	
C	
B	
A	

SHT 13 OF 16
BOM BDB02
DWG 81239B

BLANK SHEET

Davis-Standard® CONTROLS
1 Extrusion Drive
Pawcatuck, CT 06379
Tel : (860) 599-1010
Fax : (860) 599-2952
www.Davis-Standard.com

DATE	10/06/05
ENG	DAG
CAD	81239B14
MSTR	

HONEYWELL GENESIS CABLE

WIRING DIAGRAM
EPIC CONSOLE
BLANK SHEET

D	
C	
B	
A	

SHT 14 OF 16
BOM BD802
DWG 81239B

SPANISH TRANSLATIONS

ENGLISH	SPANISH
E-STOP	PARO EMERGENCIA
E-STOP RESET	RESETEAR PARO EMERGENCIA
LINE START	ARRANQUE LINEA
LINE STOP	PARO LINEA
PURGE/COORD	PURGA/ COORD
ALARM SILENCE	ALARMA APAGAR
2.5" EXTRUDER	2.5" EXTRUSOR
DSA125 EXTRUDER	DSA125 EXTRUSOR
START/STOP	ARRANQUE/PARO

Davis-Standard® CONTROLS
1 Extrusion Drive
Pawcatuck, CT 06379
Tel : (860) 599-1010
Fax : (860) 599-2952
www.Davis-Standard.com

DATE	10/11/05
ENG	DAG
CAD	81239B15
MSTR	

HONEYWELL GENESIS CABLE

WIRING DIAGRAM
EPIC CONSOLE
TRANSLATIONS

D	
C	
B	
A	

SHT 15 OF 16
BOM BD802
DWG 81239B

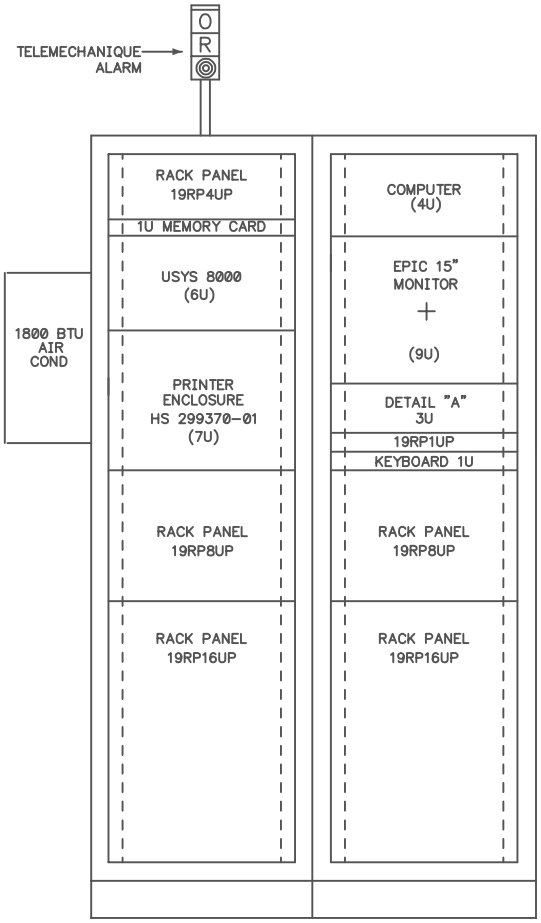

FRONT VIEW
HS 101045 01
(QTY. 2)

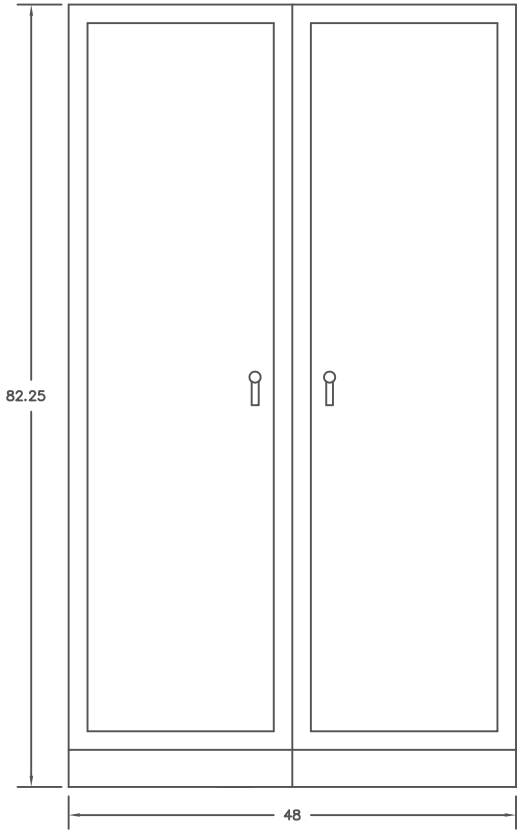

REAR VIEW

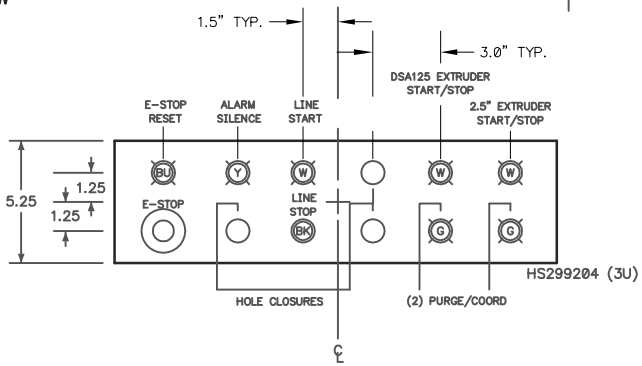

DETAIL "A"

R-L WIRE LINE DIRECTION

NOTE: ALL TAGS TO BE IN SPANISH.
SEE SHT. 15 FOR TRANSLATIONS.

EPIC PANEL

Davis-Standard® CONTROLS
1 Extrusion Drive
Pawcatuck, CT 06379
Tel : (860) 599-1010
Fax : (860) 599-2952
www.Davis-Standard.com

DATE	12/06/05
ENG	DAG
CAD	81239B16
MSTR	

HONEYWELL GENESIS CABLE

BLOCK DIAGRAM
MAIN EPIC OPERATOR'S PANEL

D	
C	
B	
A	

SHT 16 OF 16
BOM BD802
DWG 81239B

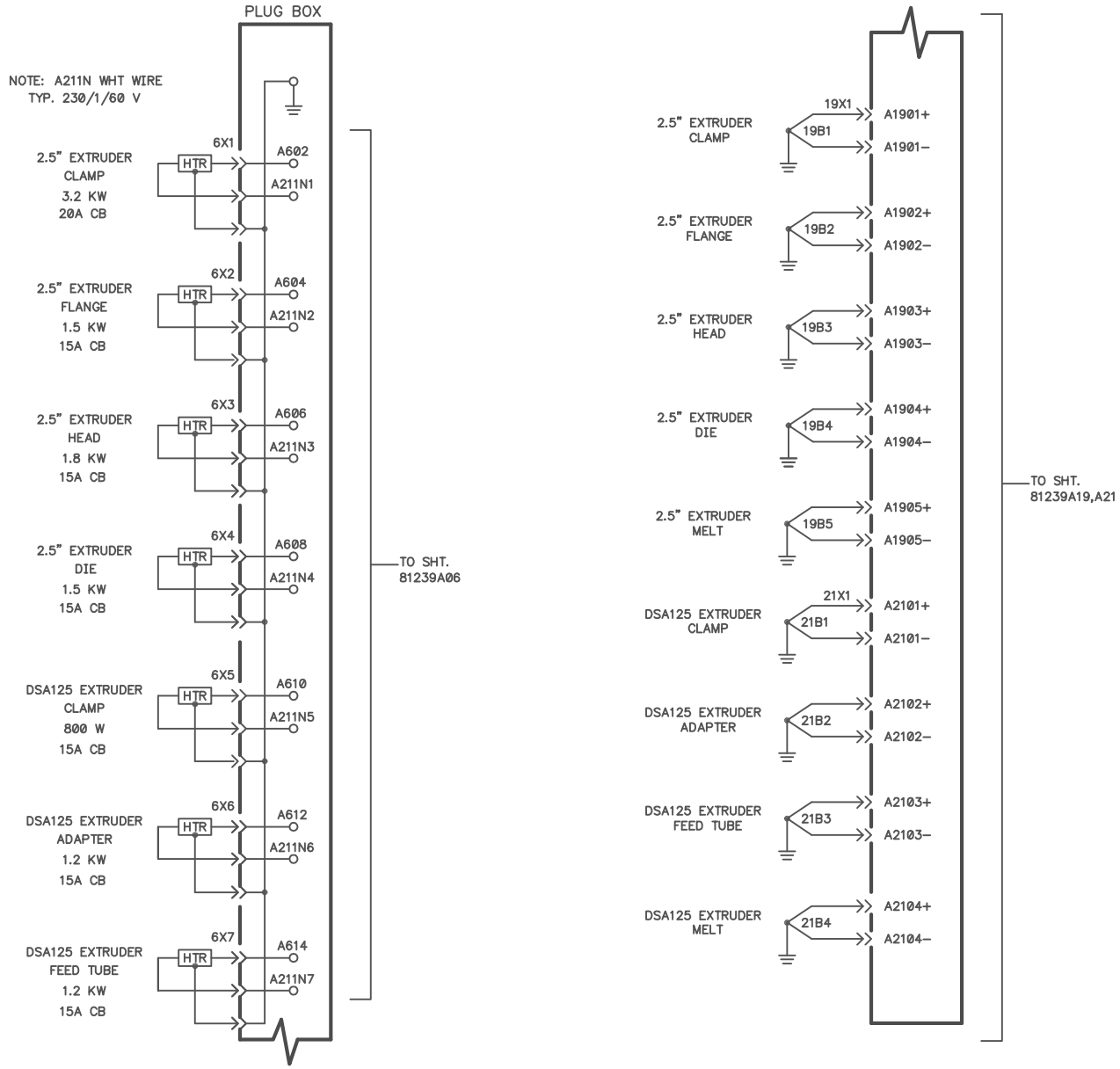

Davis-Standard® CONTROLS
1 Extrusion Drive
Pawcatuck, CT 06379
Tel : (860) 599-1010
Fax : (860) 599-2952
www.Davis-Standard.com

DATE	10/06/05
ENG	DAG
CAD	81239C01
MSTR	

HONEYWELL GENESIS CABLE

WIRING DIAGRAM
DIE POWER & T/C INPUT

D	
C	
B	
A	

SHT 1 OF 3
BOM BD796
DWG 81239C

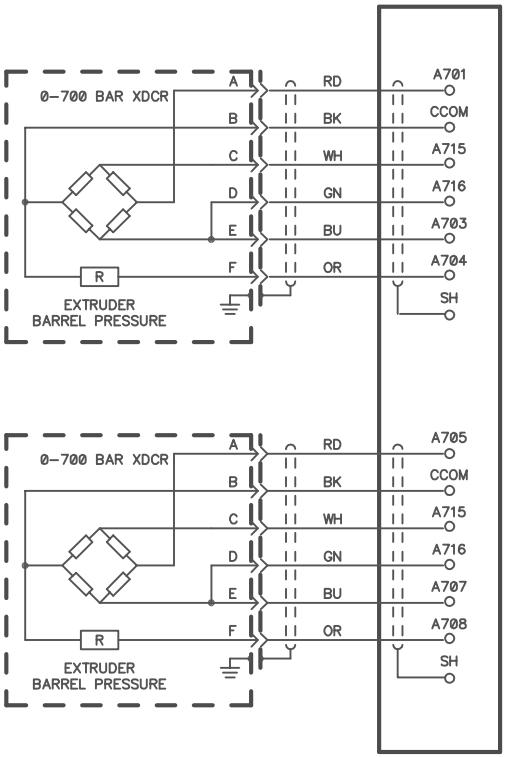

2.5" MAIN EXTRUDER
BARREL PRESSURE
TO DRIVE PANEL
DWG. "A", SHT. 7

DSA125 STRIPE EXTRUDER
BARREL PRESSURE
TO DRIVE PANEL
DWG. "A", SHT. 7

Davis-Standard® CONTROLS
1 Extrusion Drive
Pawcatuck, CT 06379
Tel : (860) 599-1010
Fax : (860) 599-2952
www.Davis-Standard.com

DATE	10/07/05
ENG	DAG
CAD	81239C02
MSTR	

HONEYWELL GENESIS CABLE

WIRING DIAGRAM
PRESSURE LOGIC

D	
C	
B	
A	

SHT 2 OF 3
BOM BD796
DWG 81239C

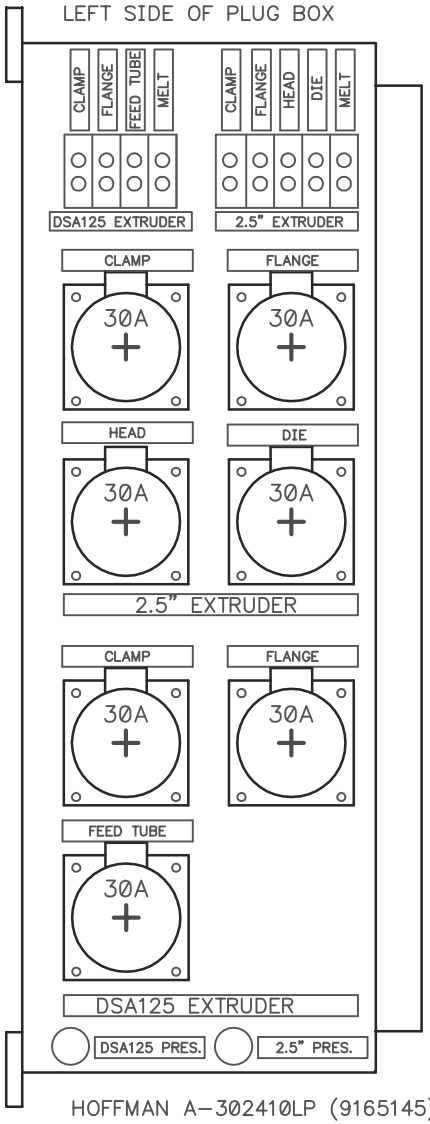

HOFFMAN A-302410LP (9165145)
SUBPANEL = (9125508)

R-L WIRE LINE DIRECTION

NOTE; LEAVE MOUNTING TABS INTACT

QTY.	COMPONENT	9 MILLION NO.
7	HUBBELL 30A 3W RECEPT	9416454
1	5 POS. T/C JACK	9419005
1	4 POS. T/C JACK	9419004
7	LOOSE HUBBELL 30A PLUGS	9416455

NOTE: ALL TAGS TO BE IN SPANISH

SPANISH TRANSLATIONS

ENGLISH	SPANISH
2.5" EXTRUDER	2.5" EXTRUSOR
DSA125 EXTRUDER	DSA125 EXTRUSOR
CLAMP	MORDAZA
FLANGE	BRIDA
HEAD	CABEZA
DIE	DADO
FEED TUBE	TUBO ALIMENTACION
MELT	FUNDIR
START/STOP	ARRANQUE/PARO
PRESSURE	PRESION

Davis-Standard® CONTROLS
1 Extrusion Drive
Pawcatuck, CT 06379
Tel : (860) 599-1010
Fax : (860) 599-2952
www.Davis-Standard.com

DATE	10/07/05
ENG	DAG
CAD	81239C03
MSTR	

HONEYWELL GENESIS CABLE

WIRING DIAGRAM
ENCLOSURE DIAGRAM

D	
C	
B	
A	

SHT 3 OF 3
BOM BD796
DWG 81239C

HONEYWELL GENESIS CABLE
SO# 81239
DRAWING INDEX

81239A – DRIVE/HEAT PANEL
BOM# – BD803

CAD No.	SHT. No.	DESCRIPTION	
81239A01	1	POWER DISTRIBUTION	
81239A02	2	POWER DISTRIBUTION	
81239A03	3	POWER DISTRIBUTION	
81239A04	4	2.5" MAIN EXTRUDER BARREL HEAT ZONES	
81239A05	5	DSA125 STRIPE EXTRUDER BARREL HEAT ZONES	
81239A06	6	EXTRUDER DIES	
81239A07	7	PRESSURE & HEAT CONTROL	
81239A08	8	E–STOP	
81239A09	9	E–STOP/CONTROL LOGIC	
81239A10	10	CONTROL LOGIC	
81239A11	11	DSA125 LIFT DRIVE	
81239A12	12	2.5" MAIN EXTRUDER DRIVE	
81239A13	13	DSA125 STRIPE EXTRUDER DRIVE	
81239A14	14	PULLOUT CAPSTAN DRIVE	
81239A15	15	BLANK SHEET	
81239A16	16	PLC RACK LAYOUT/CNB MODULE	
81239A17	17	PLC T/C MODULE	SLOT 1
81239A18	18	PLC T/C MODULE	SLOT 2
81239A19	19	PLC T/C MODULE	SLOT 3
81239A20	20	PLC T/C MODULE	SLOT 4
81239A21	21	PLC T/C MODULE	SLOT 5
81239A22	22	PLC ANALOG INPUT MODULE	SLOT 6
81239A23	23	PLC ANALOG OUTPUT MODULE	SLOT 7
81239A24	24	BLANK SHEET	SLOT 8
81239A25	25	PLC DC INPUT MODULE	SLOT 9
81239A26	26	PLC DC INPUT MODULE	SLOT 10
81239A27	27	PLC DC INPUT MODULE	SLOT 11
81239A28	28	PLC DC INPUT MODULE	SLOT 12
81239A29	29	BLANK SHEET	SLOT 13
81239A30	30	PLC DC OUTPUT MODULE	SLOT 14
81239A31	31	PLC DC OUTPUT MODULE	SLOT 15
81239A32	32	PLC DC OUTPUT MODULE	SLOT 16
81239A33	33	BLANK SHEET	
81239A34	34	BLANK SHEET	
81239A35	35	BLANK SHEET	
81239A36	36	ENCLOSURE BLOCK DIAGRAM	

81239B – COMPUTER 19" RACK
BOM# – BD802

CAD No.	SHT. No.	DESCRIPTION
81239B01	1	POWER DISTRIBUTION
81239B02	2	EPIC III COMPUTER
81239B03	3	CLINTON HF–15AR/BD14 SPARKTESTER
81239B04	4	ZUMBACH USYS 8000
81239B05	5	BLANK SHEET
81239B06	6	CONTROL LOGIC
81239B07	7	PLC RACK LAYOUT
81239B08	8	PLC PROCESSOR
81239B09	9	ETHERNET MODULE
81239B10	10	FUTURE DH+/RIO MODULE
81239B11	11	BLANK SHEET
81239B12	12	DC INPUT MODULE
81239B13	13	DC OUTPUT MODULE
81239B14	14	BLANK SHEET
81239B15	15	TRANSLATIONS
81239B16	16	19" RACK ENCLOSURE

81239C – PLUG BOX
BOM# – BD796

CAD No.	SHT. No.	DESCRIPTION
81239C01	1	DIE POWER & THERMCOUPLE INPUT
81239C02	2	PRESSURE LOGIC
81239C03	3	BLOCK DIAGRAM

81239E – DSA125 LIFT OCS
BOM# – BE959

CAD No.	SHT. No.	DESCRIPTION
81239C01	1	CONTROL LOGIC/BLOCK DIAGRAM

Davis-Standard® CONTROLS
1 Extrusion Drive
Pawcatuck, CT 06379
Tel : (860) 599-1010
Fax : (860) 599-2952
www.Davis-Standard.com

DATE	12/06/05
ENG	DAG
CAD	81239–01
MSTR	PD10–A

HONEYWELL GENESIS CABLE

DRAWING INDEX

D	
C	
B	
A	

SHT 1 OF 5
BOM
DWG 81239–