**MAIN PARTS**

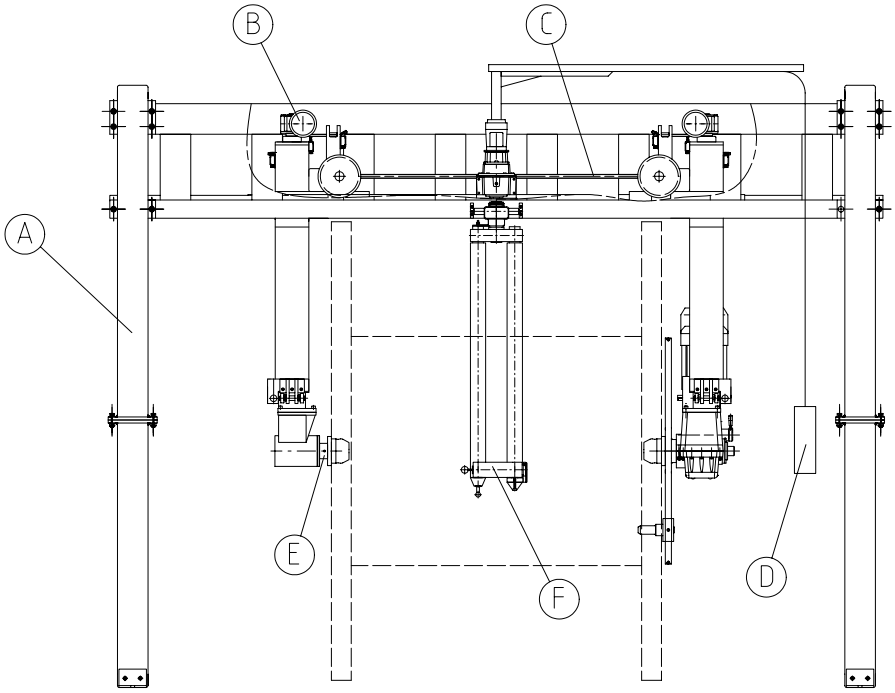


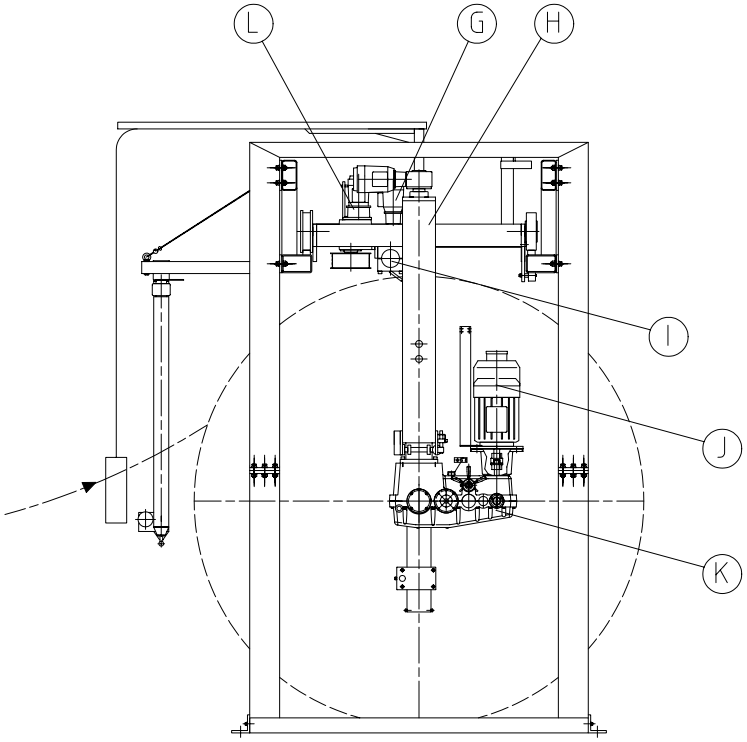


A. Portal

B. Lifting motor

C. Widening screw

D. Hanging control panel

E. Pintle

F. Guide rollers

G. Widening motor

H. Carriage

I. Main shaft

J. Main drive

K. 2 speed gearbox

L. Traversing motor with gear


© ***Maillefer Extrusion Oy***

# TECHNICAL DATA

All correspondence, spare parts order and other documents, should be marked with WOQ-number.

Type : TUT 10-336
Year : 2011
WO Nr : 11G04012 15

| | | | |
|---|---|---|---|
| **Main voltage** | 3x480 V, 60 Hz | **Max reel weight** | 10000 kg |
| **Operating** | 115 V AC, 24 V DC | **Cable d min.- max.** | 6-120 mm |
| **Fuses** | 3x35 A | **Reel d1 min.- max.** | 1000-2600 mm |
| **Height** | 3675 mm | **W1/W2 max.** | 1900/1700 mm |
| **Width** | 2260 mm | **W1 min.** | 700 mm |
| **Length** | 4500 mm | **Noiselevel** | <83 dB(A) |
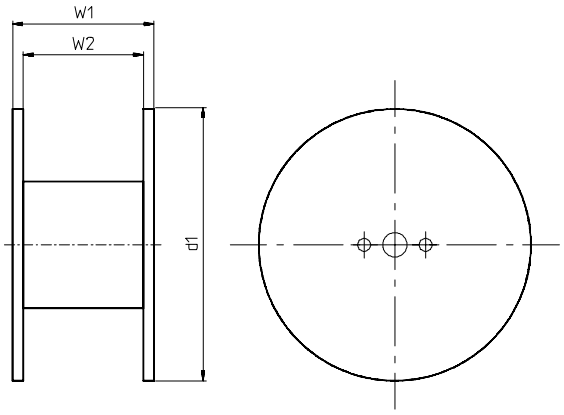
| **Motor. 11kW** | | | | | |
|---|---|---|---|---|---|
| **Drive** | **Gear step** | | | | |
| | **1** | | **2** | | |
| | **50Hz** | **100Hz** | **50Hz** | **100Hz** | |
| | 9 | 18 | 30 | 60 | rpm |
| | 11600 | 3800 | 3500 | 1150 | Nm |